ANT1 2345G LB2&MB3&HB3

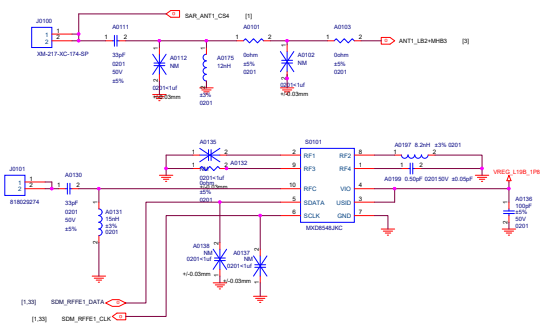

ANT2_2345G LB3&MHB2 B32 N78*3

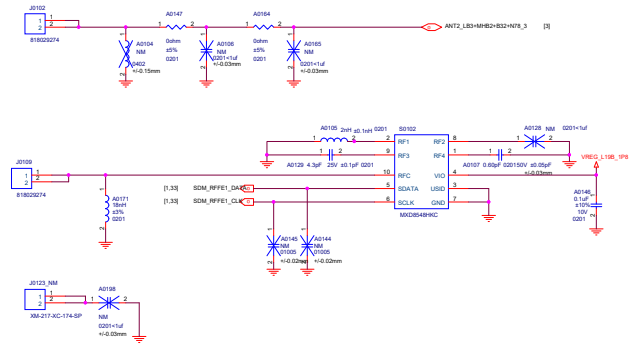

SAR SENSOR

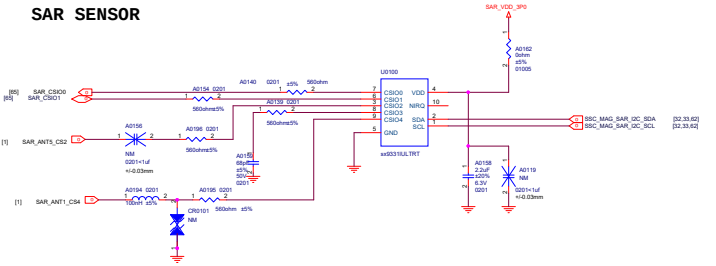

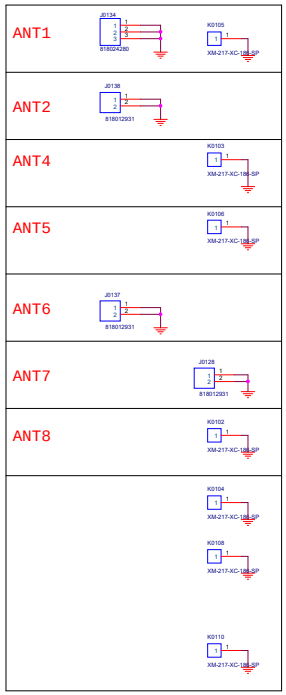

ANT4_ N78*2

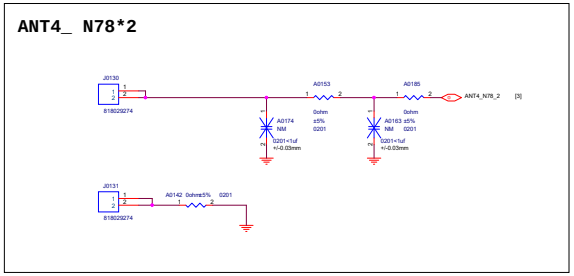

ANT5_B32+N78_1

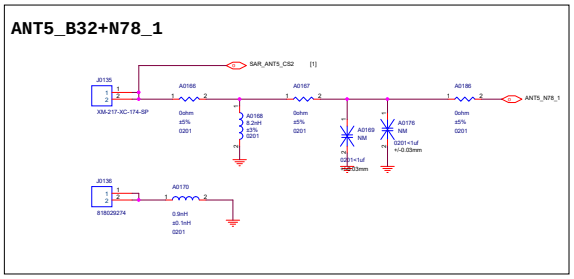

ANT6_ N78*4/B32

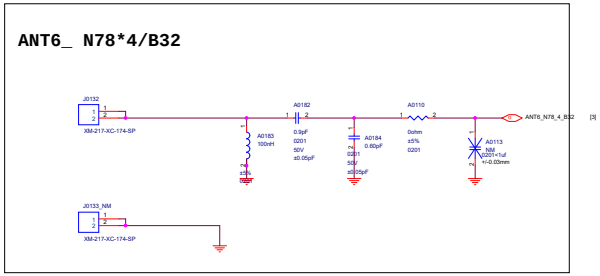

ANT7_Combo（GPSL1+WiFi CH0）

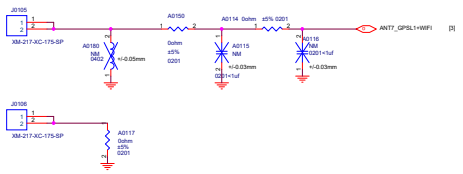

ANT8_WIFI CH1

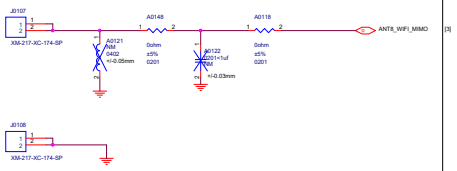

Title: GTA MAIN		
Size: A1	Document Number: <Doc>	Rev: P1S
Date:	Sheet 1 of 72	

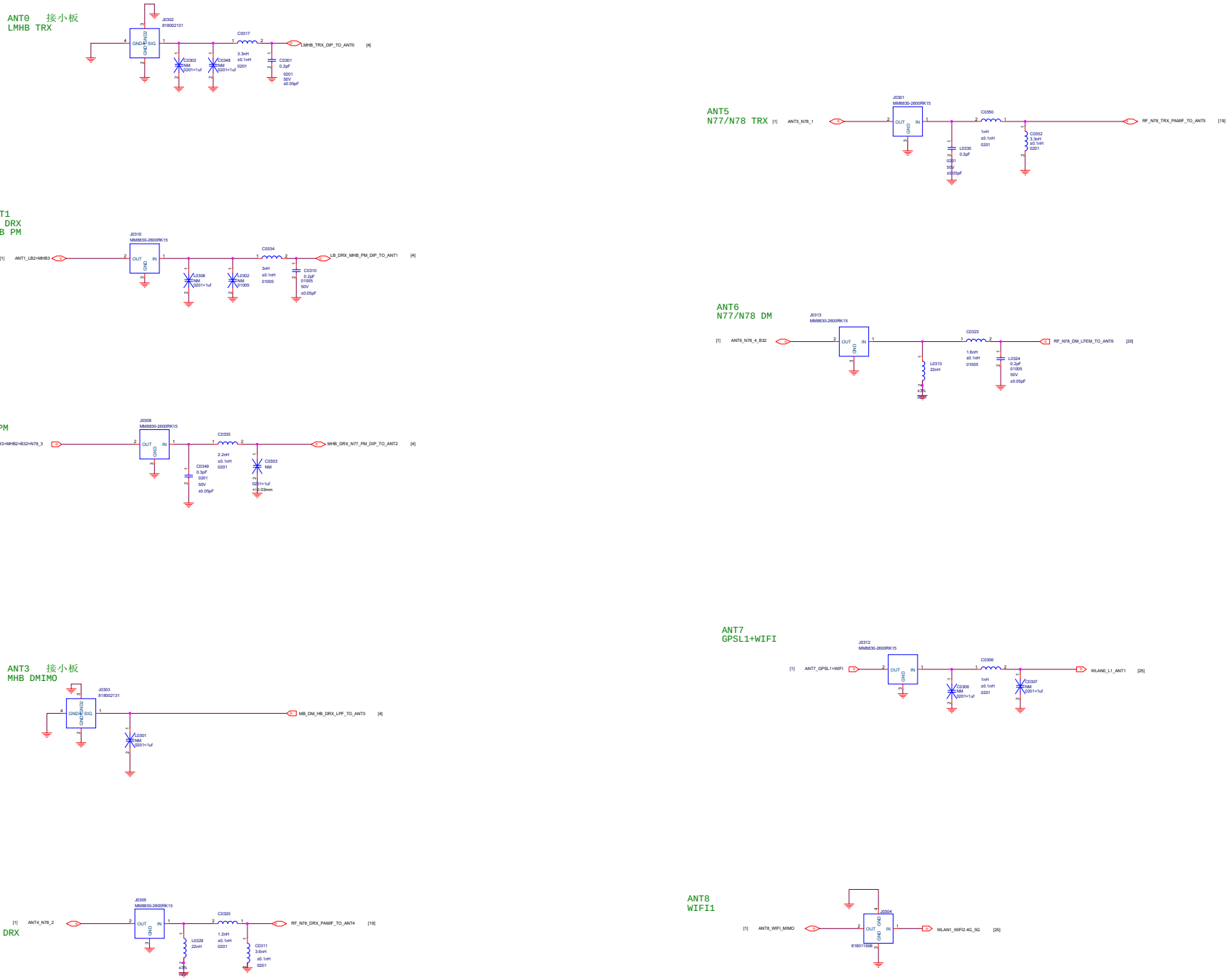

Title: J11 MAIN			
Size: A1	Document Number: <Doc>		Rev: P0
Date:		Sheet 3 of 73	

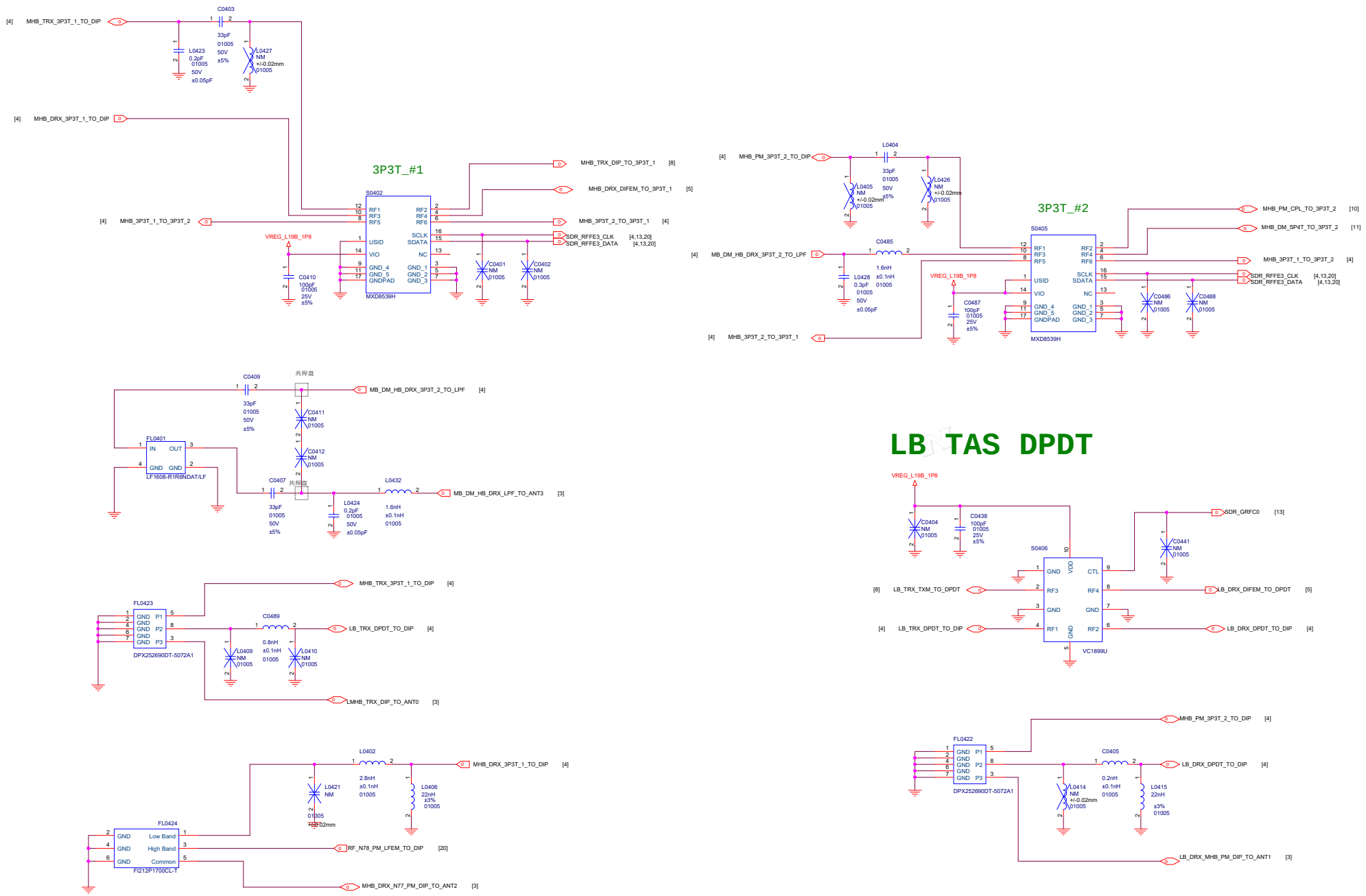

Title	L9D/L12S_MAIN_TEST	
Size A2	Document Number PRX	Rev P0
Date:	Sheet 4 of 82	

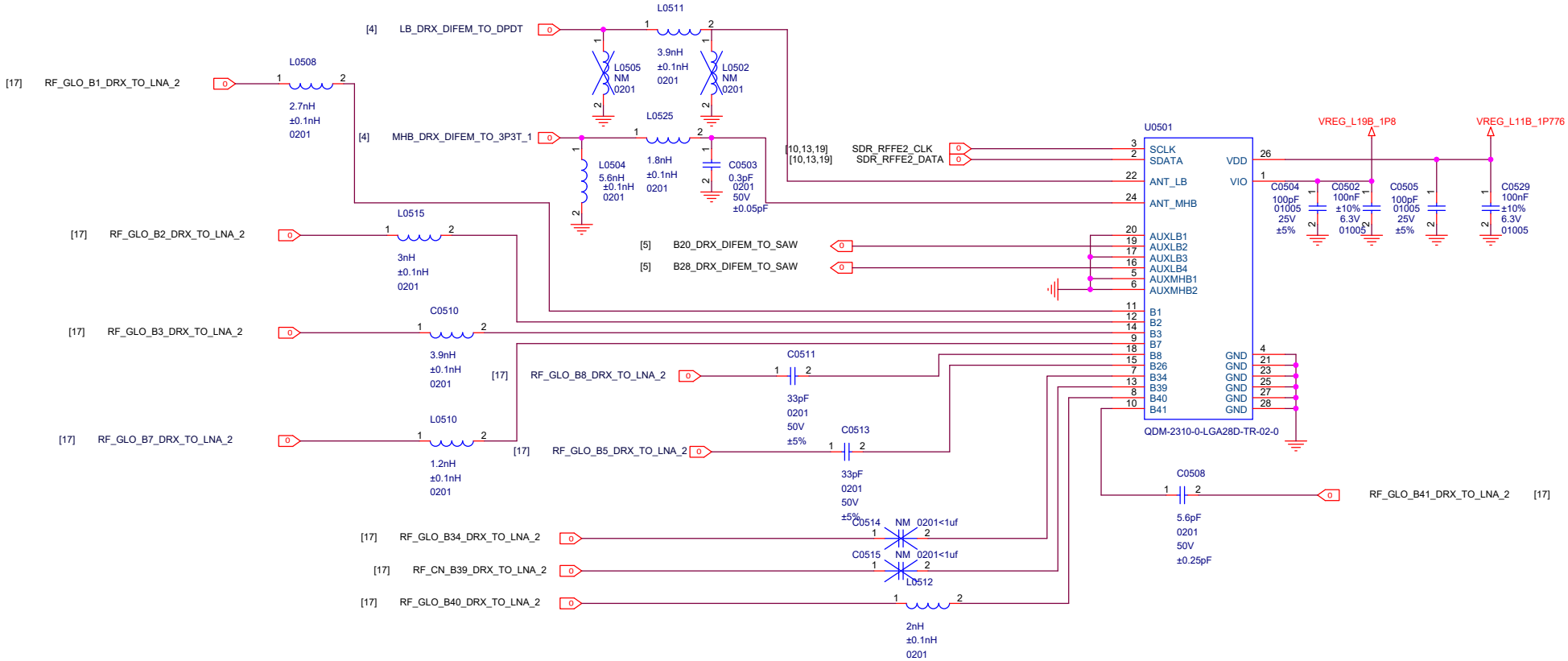

B20 RX SAW

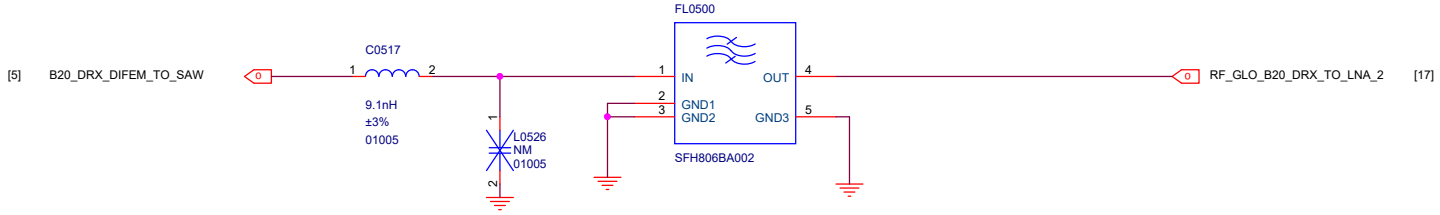

B28 RX SAW

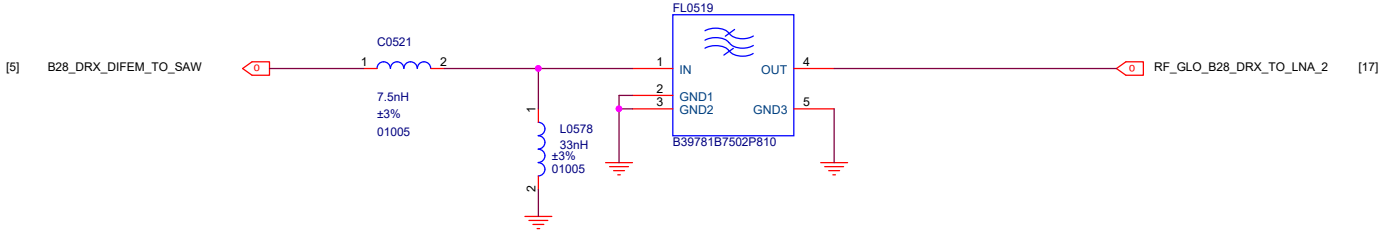

Title	L9D/L13S_MAIN_TEST	
Size A3	Document Number DRX	Rev P0
Date:	Sheet 5 of 82	

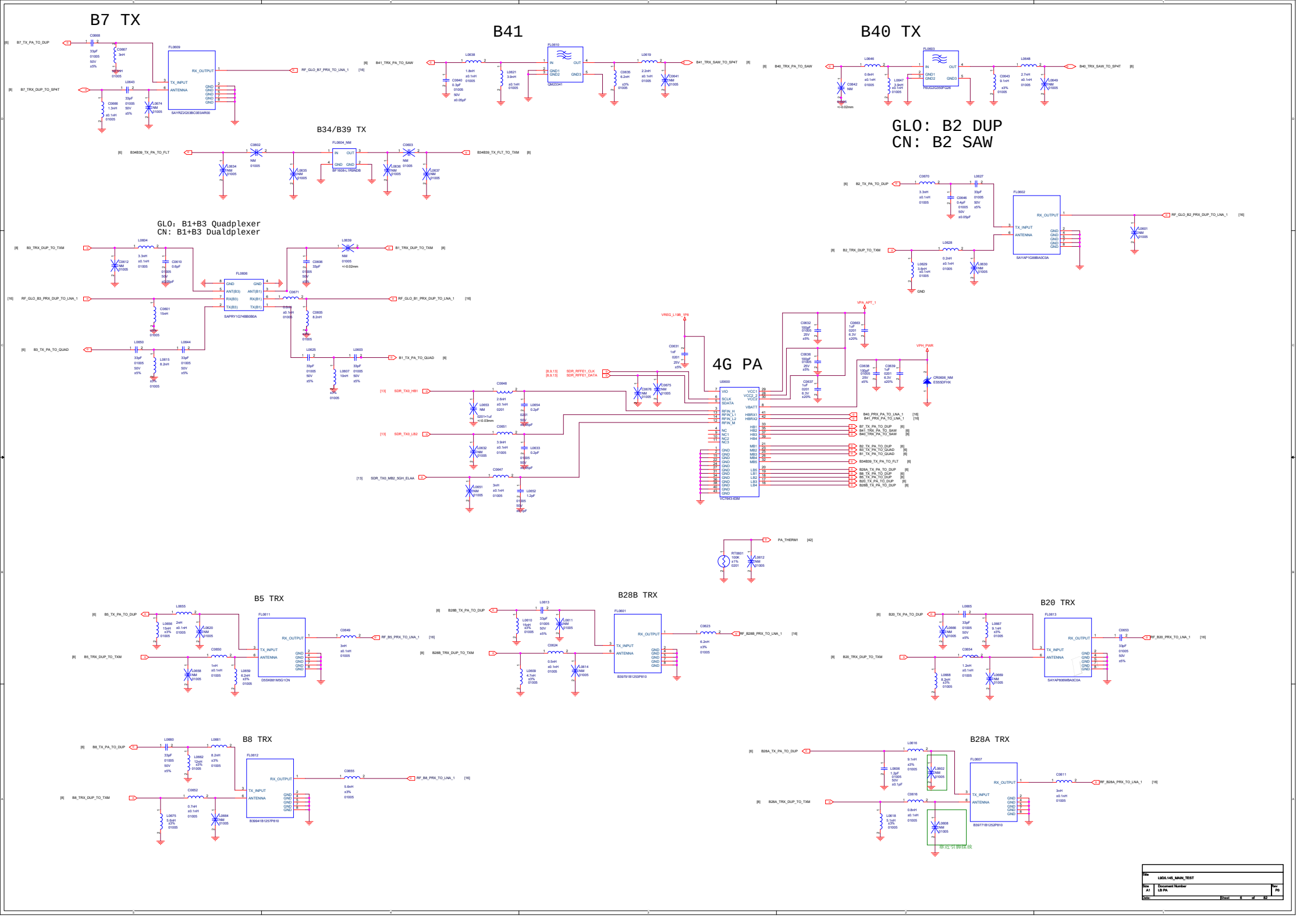
B7 TX
B41
B40 TX
B34/B39 TX
GLO: B2 DUP
CN: B2 SAW
GLO: B1+B3 Quadplexer
CN: B1+B3 Dualdplexer
4G PA
B5 TRX
B28B TRX
B20 TRX
B8 TRX
B28A TRX
LB0L145_MAIN_TEST
LB PA
P0

LMHB MMBPA

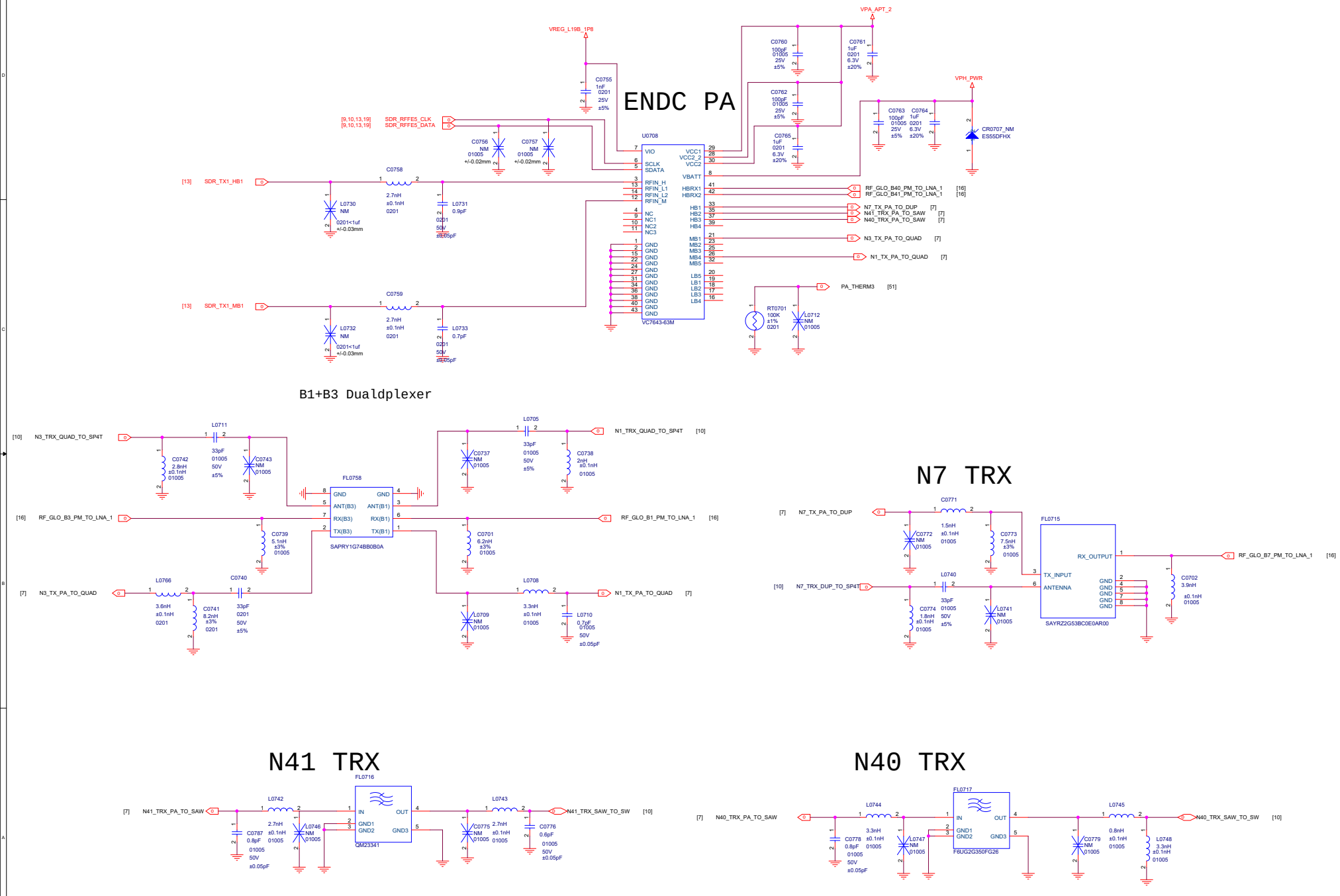

Title	L9D/L15S_MAIN_TEST
Size A2	Document Number MHB PA
Rev	P0
Date:	Sheet 7 of 82

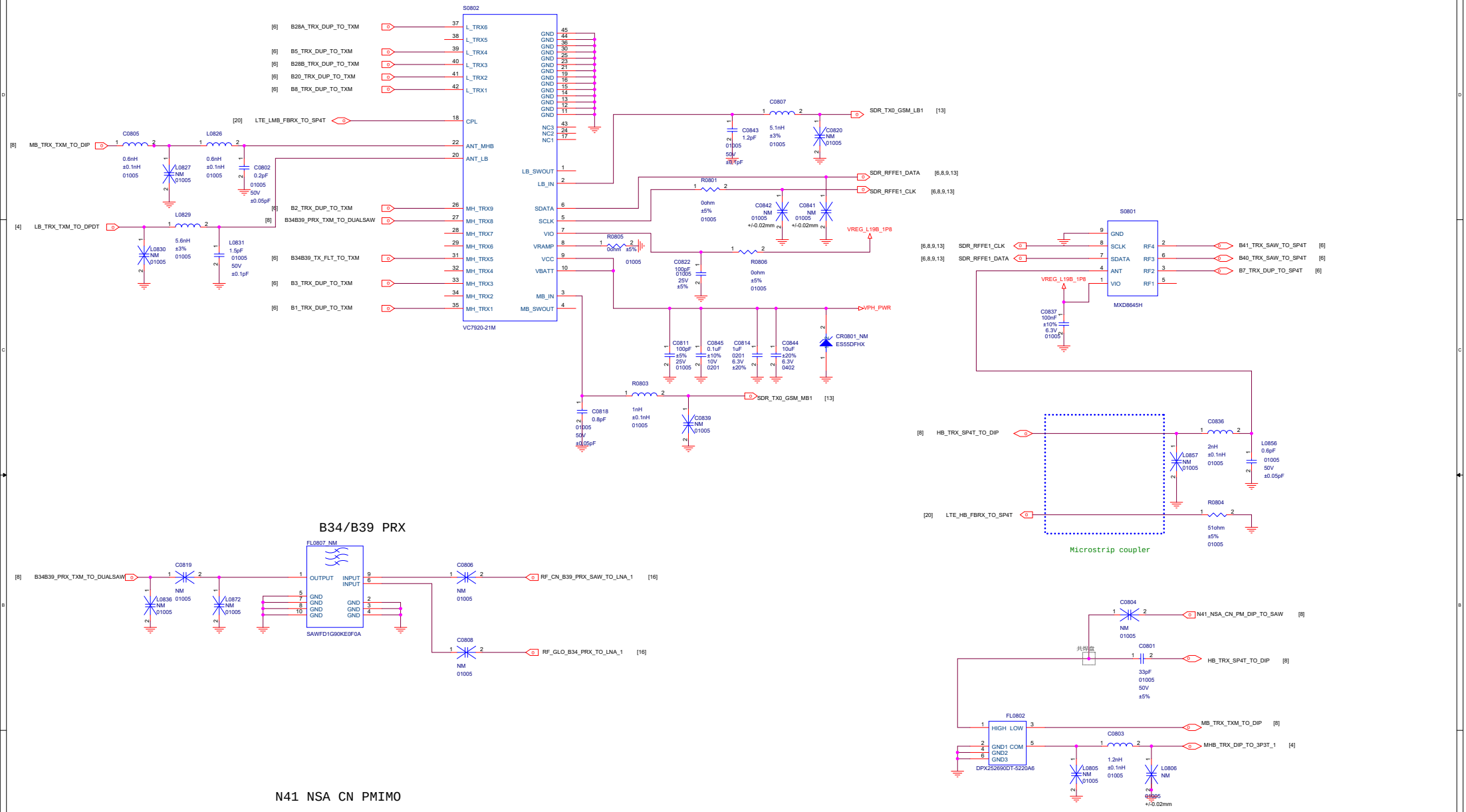

Title	L9D/L16S_MAIN_TEST	
Size A2	Document Number ENDC PA	Rev P0
Date:	Sheet 8 of 82	

5G QET

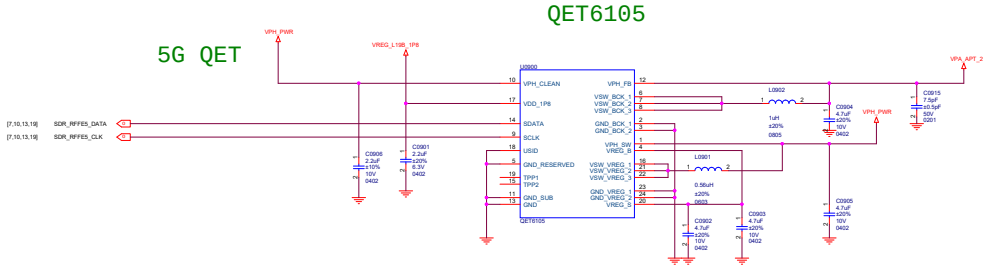

4G QET

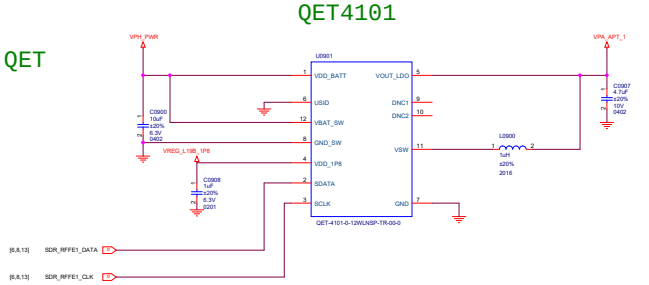

Title: L8D/L17S_MAIN_TEST		
Size: A1	Document Number: RF DC-DC	Rev: P0
Date:	Sheet 9 of 52	

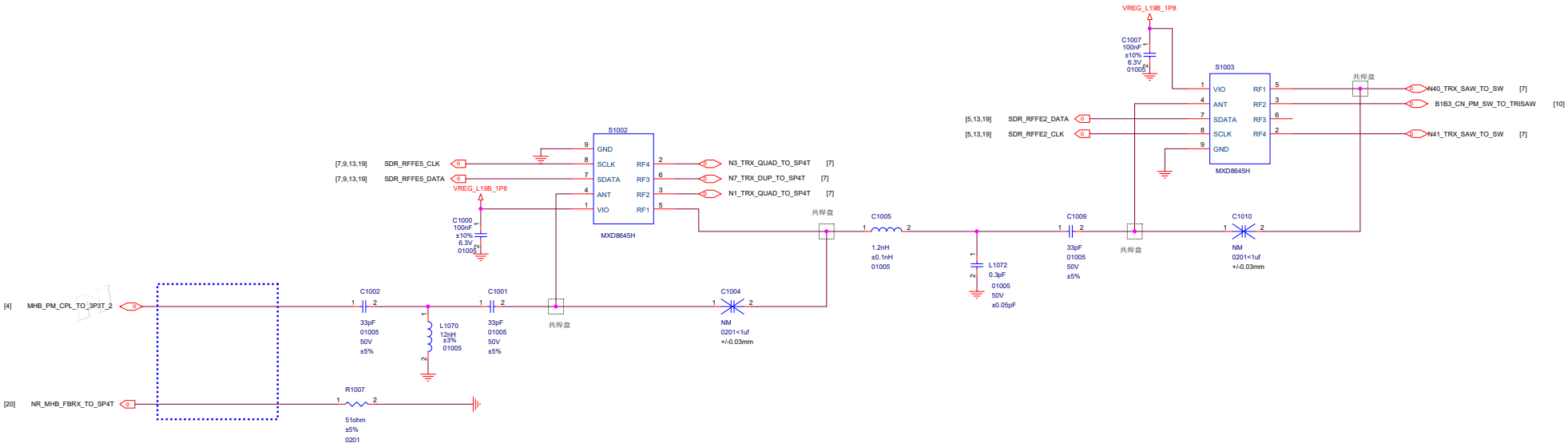

B1/B3 CN PM

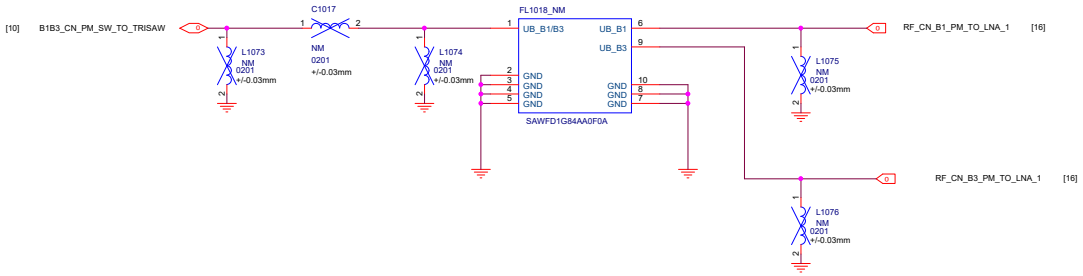

Title	L9D/L18S_MAIN_TEST	
Size A2	Document Number PRX MIMO	Rev P0
Date:	Sheet 10 of 82	

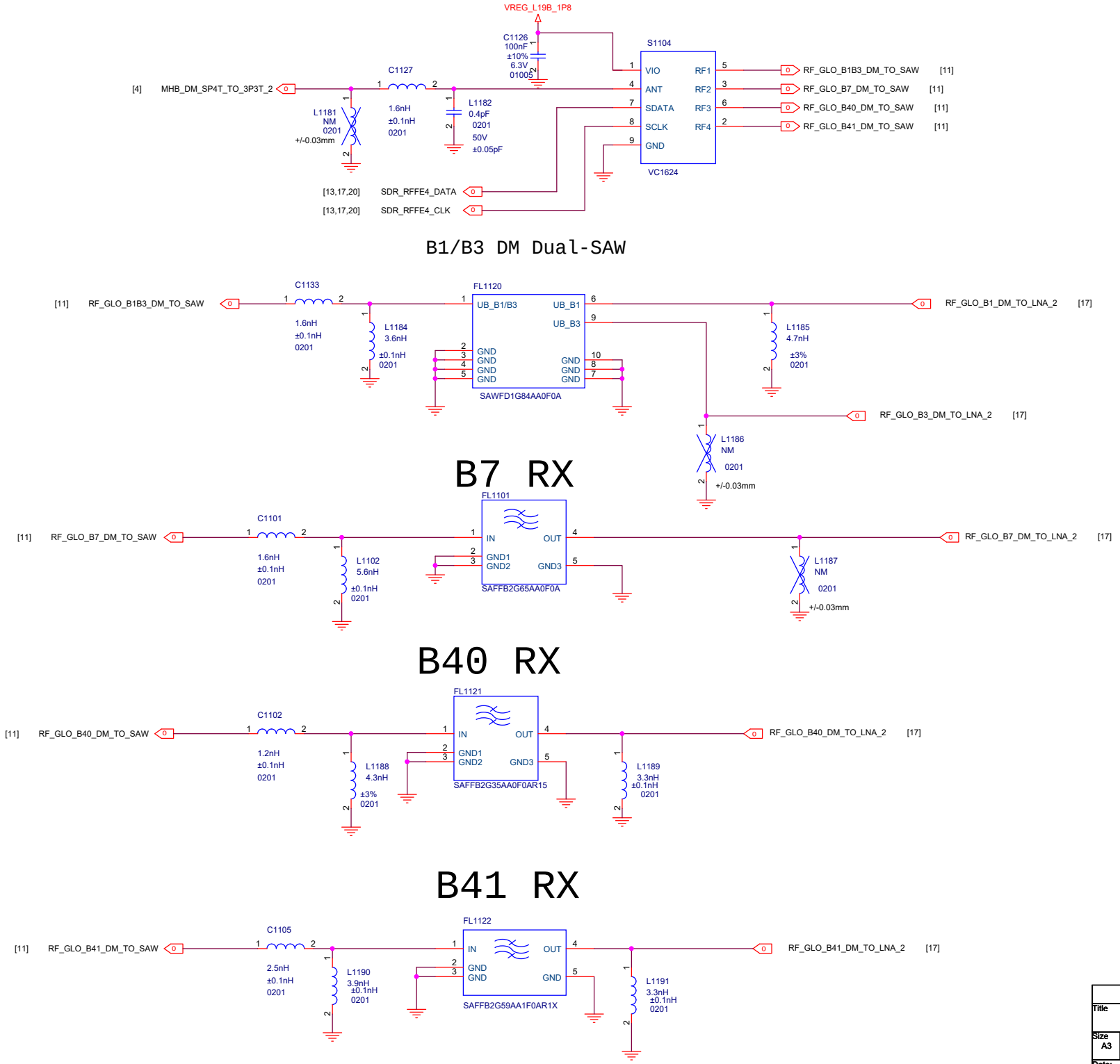

Title	L9D/L19S_MAIN_TEST	
Size A3	Document Number DRX MIMO	Rev P0
Date:	Sheet 11 of 82	

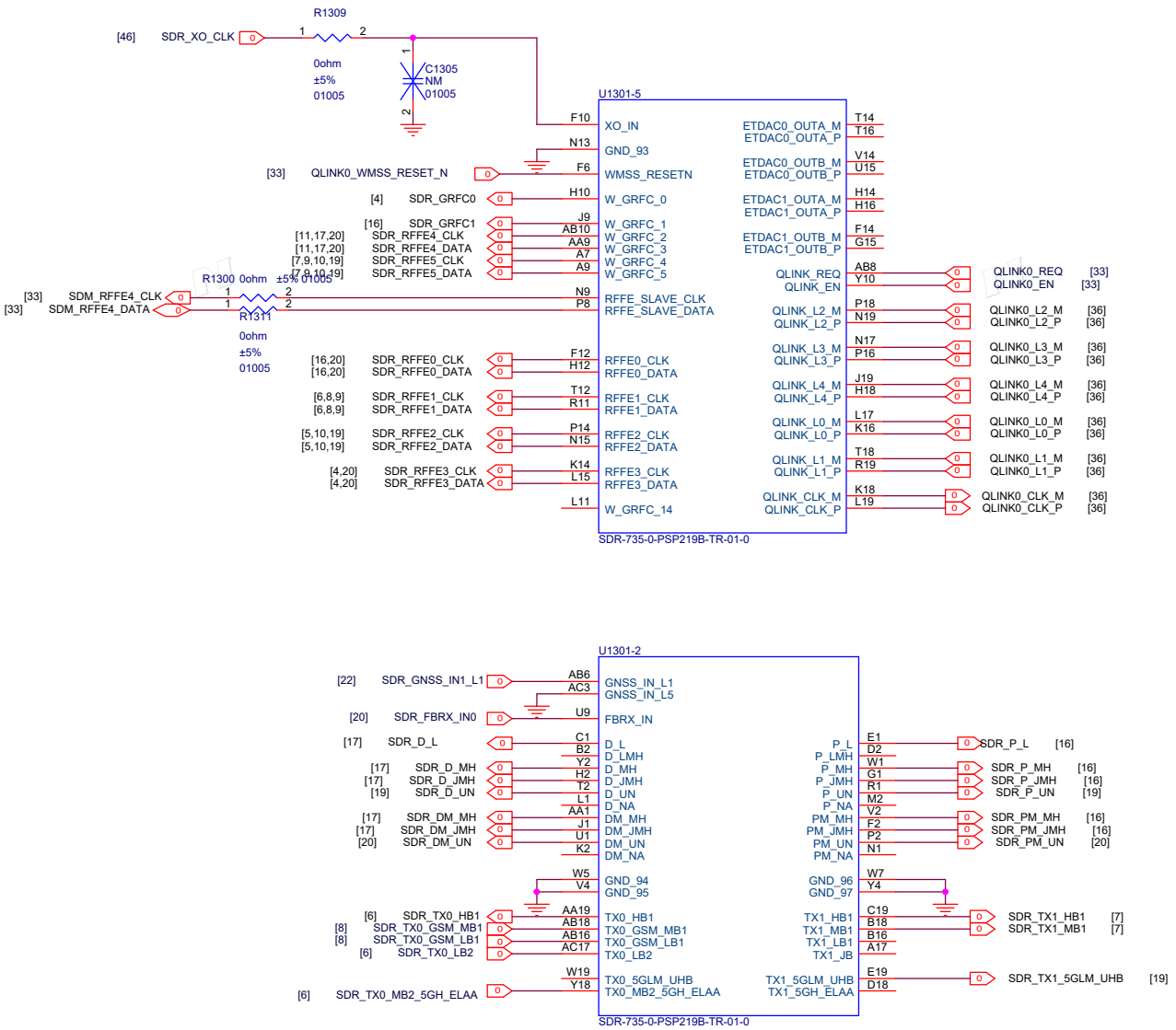

Title	L9D/L21S_MAIN_TEST	
Size A3	Document Number WTR Interface	Rev P1
Date:	Sheet 13 of 82	

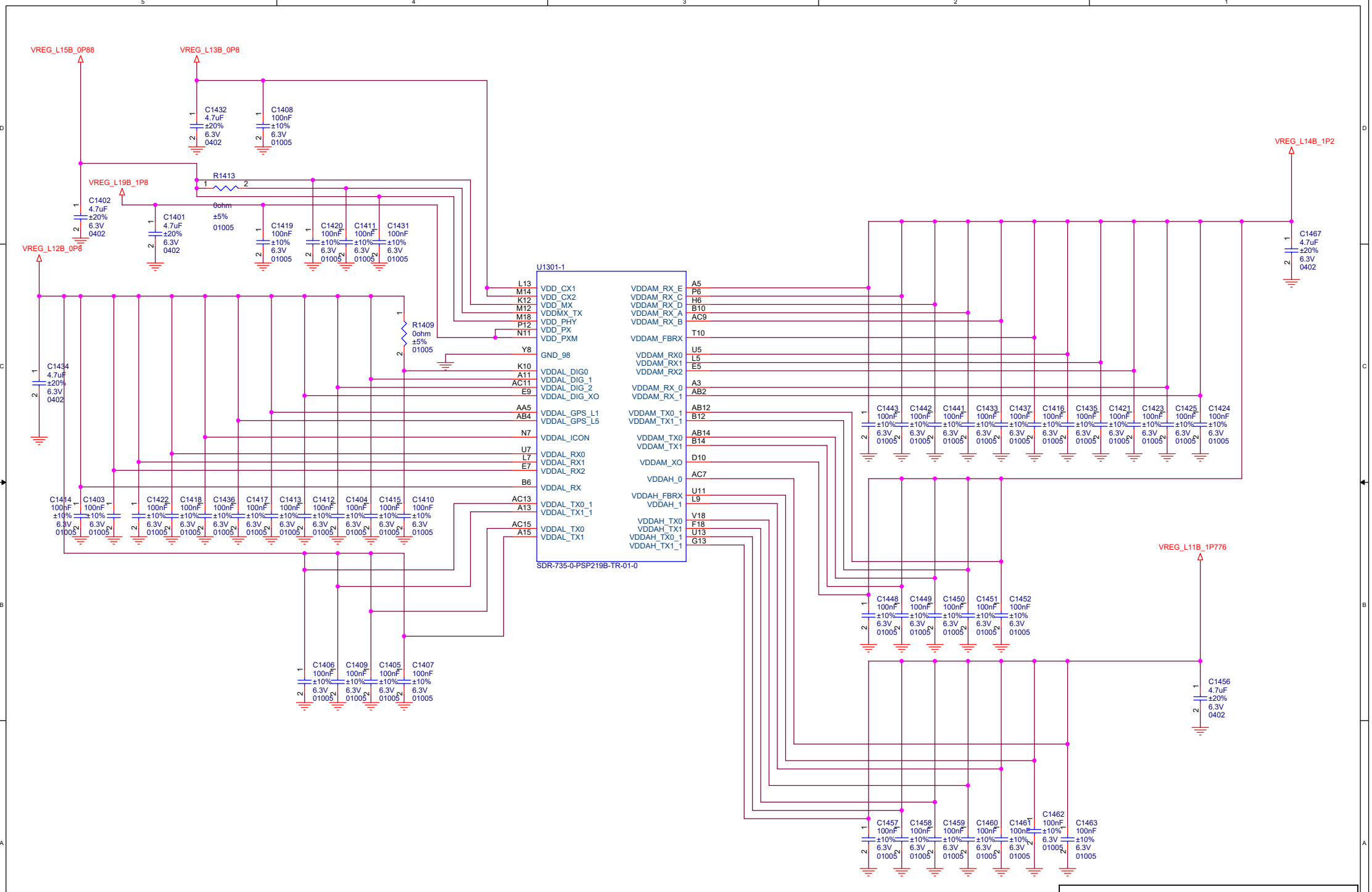

Title	L9D/L22S_MAIN_TEST	
Size A3	Document Number WTR PWR	Rev P0
Date:	Sheet 14 of 82	

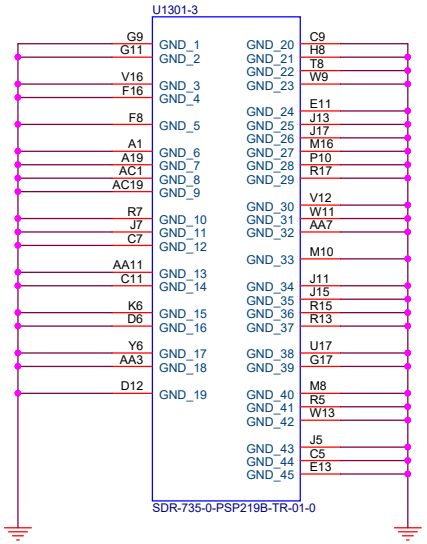

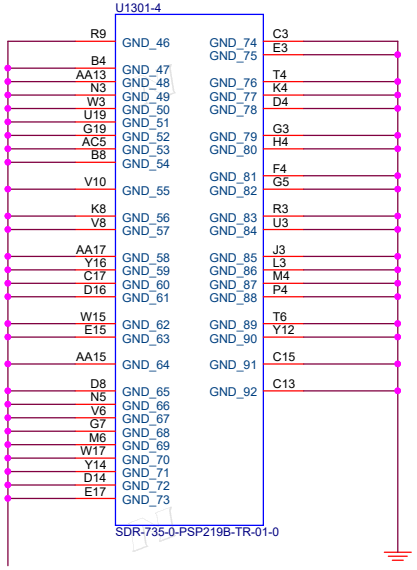

Title	L9D/L23S_MAIN_TEST	
Size A3	Document Number Reserved(for WTR)	Rev P1
Date:	Sheet 15 of 82	

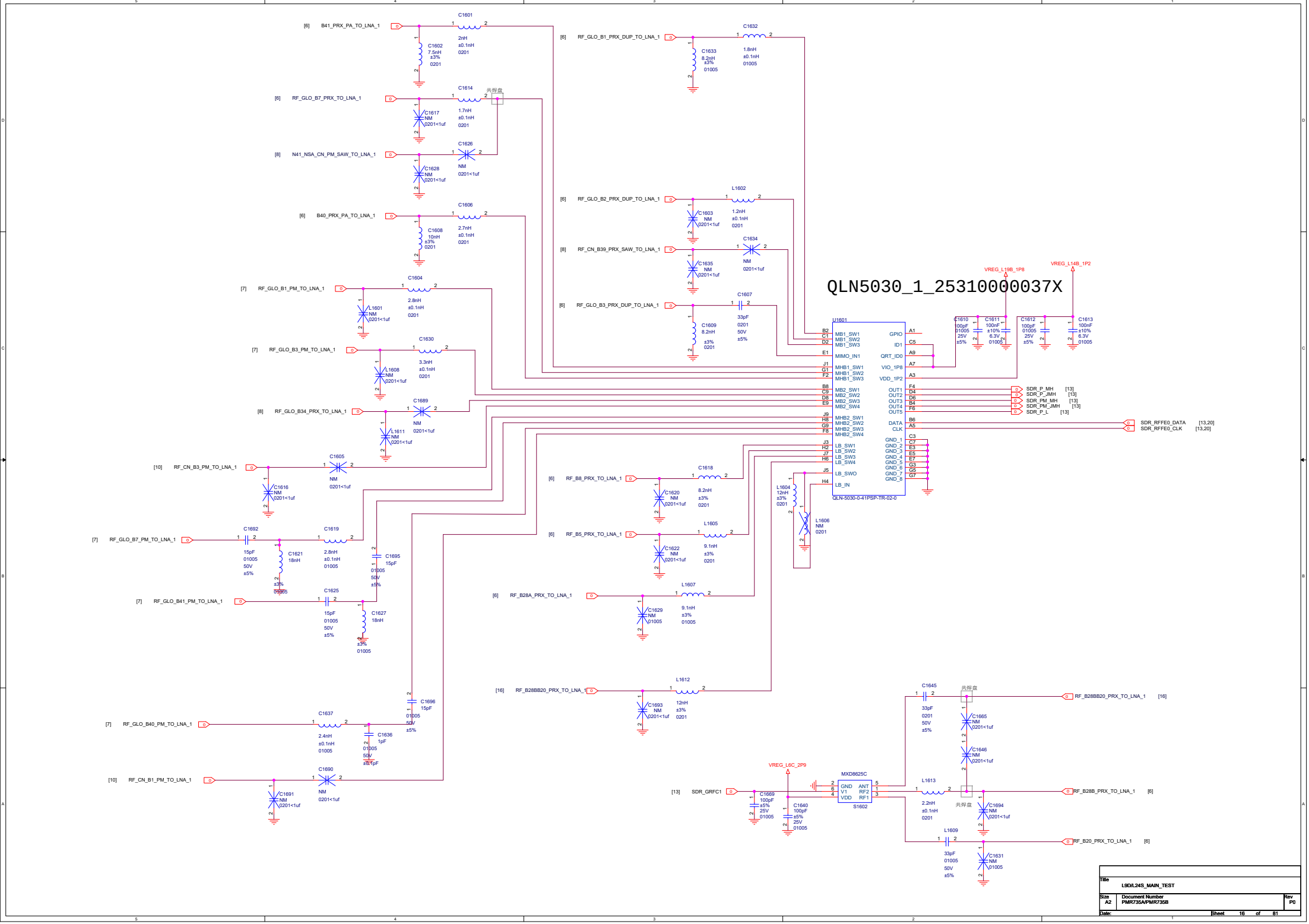
QLN5030_1_25310000037X
U1601
QLN-5030-0-41PSP-TR-02-0
MB1_SW1
MB1_SW2
MB1_SW3
MIMO_IN1
MHB1_SW1
MHB1_SW2
MHB1_SW3
MB2_SW1
MB2_SW2
MB2_SW3
MB2_SW4
MHB2_SW1
MHB2_SW2
MHB2_SW3
MHB2_SW4
LB_SW1
LB_SW2
LB_SW3
LB_SW4
LB_SWO
LB_IN
GPIO
ID1
QRT_ID0
VIO_1P8
VDD_1P2
OUT1
OUT2
OUT3
OUT4
OUT5
DATA
CLK
GND_1
GND_2
GND_3
GND_4
GND_5
GND_6
GND_7
GND_8
VREG_L19B_1P8
VREG_L14B_1P2
SDR_P_MH [13]
SDR_P_JMH [13]
SDR_PM_MH [13]
SDR_PM_JMH [13]
SDR_P_L [13]
SDR_RFFE0_DATA [13,20]
SDR_RFFE0_CLK [13,20]
[6] B41_PRX_PA_TO_LNA_1
[6] RF_GLO_B7_PRX_TO_LNA_1
[8] N41_NSA_CN_PM_SAW_TO_LNA_1
[6] B40_PRX_PA_TO_LNA_1
[7] RF_GLO_B1_PM_TO_LNA_1
[7] RF_GLO_B3_PM_TO_LNA_1
[8] RF_GLO_B34_PRX_TO_LNA_1
[10] RF_CN_B3_PM_TO_LNA_1
[7] RF_GLO_B7_PM_TO_LNA_1
[7] RF_GLO_B41_PM_TO_LNA_1
[7] RF_GLO_B40_PM_TO_LNA_1
[10] RF_CN_B1_PM_TO_LNA_1
[6] RF_GLO_B1_PRX_DUP_TO_LNA_1
[6] RF_GLO_B2_PRX_DUP_TO_LNA_1
[8] RF_CN_B39_PRX_SAW_TO_LNA_1
[6] RF_GLO_B3_PRX_DUP_TO_LNA_1
[6] RF_B8_PRX_TO_LNA_1
[6] RF_B5_PRX_TO_LNA_1
[6] RF_B28A_PRX_TO_LNA_1
[16] RF_B28BB20_PRX_TO_LNA_1
[13] SDR_GRFC1
VREG_L6C_2P9
MXD8625C
S1602
共焊盘
RF_B28BB20_PRX_TO_LNA_1 [16]
RF_B28B_PRX_TO_LNA_1 [6]
RF_B20_PRX_TO_LNA_1 [6]
Title
L9D/L24S_MAIN_TEST
Size A2
Document Number PMR735A/PMR735B
Rev P0
Date:
Sheet 16 of 81

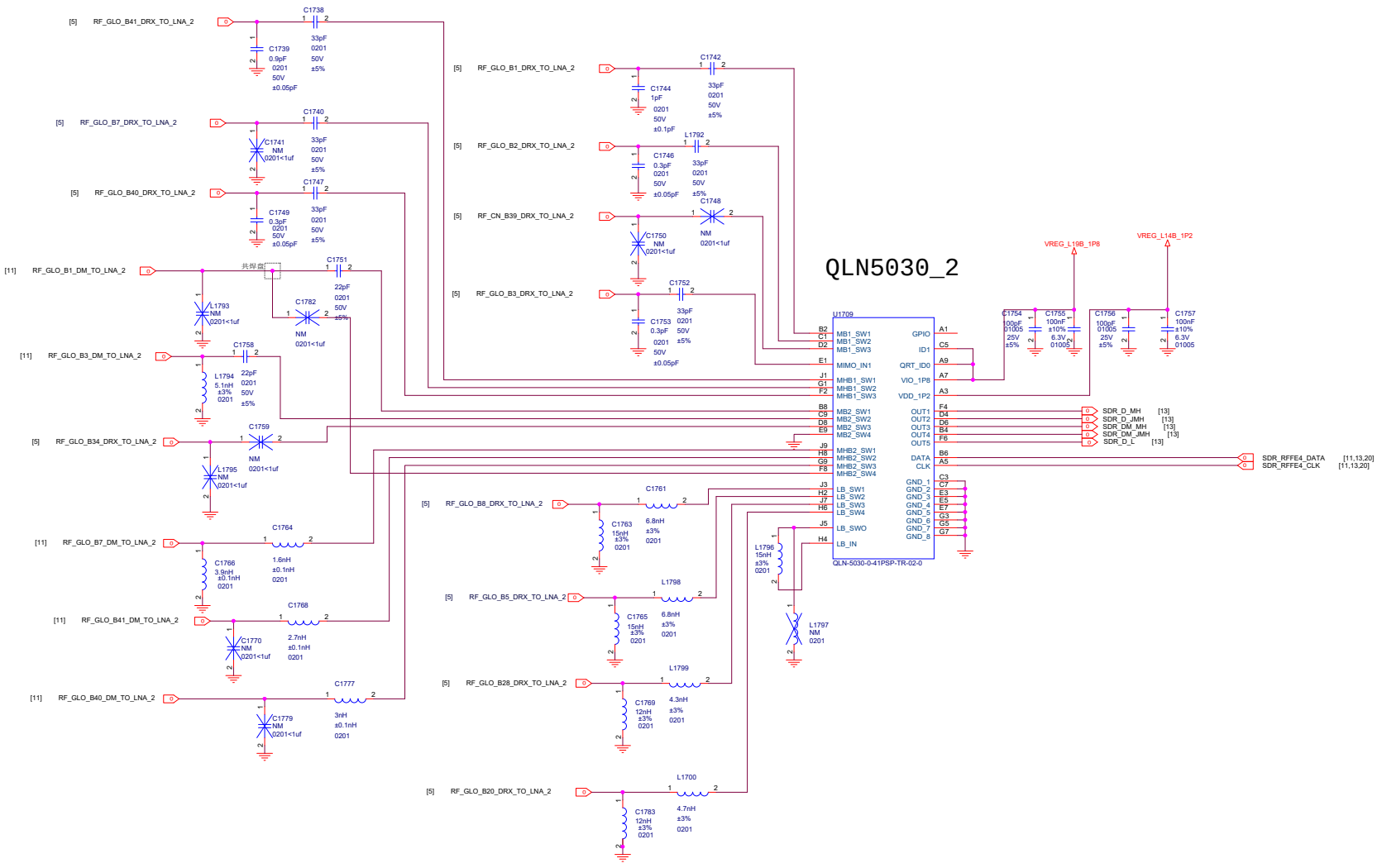

Title	L9D/L25S_MAIN_TEST
Size A2	Document Number Reserved(for MM Wave)
Rev	P0
Date:	Sheet 17 of 82

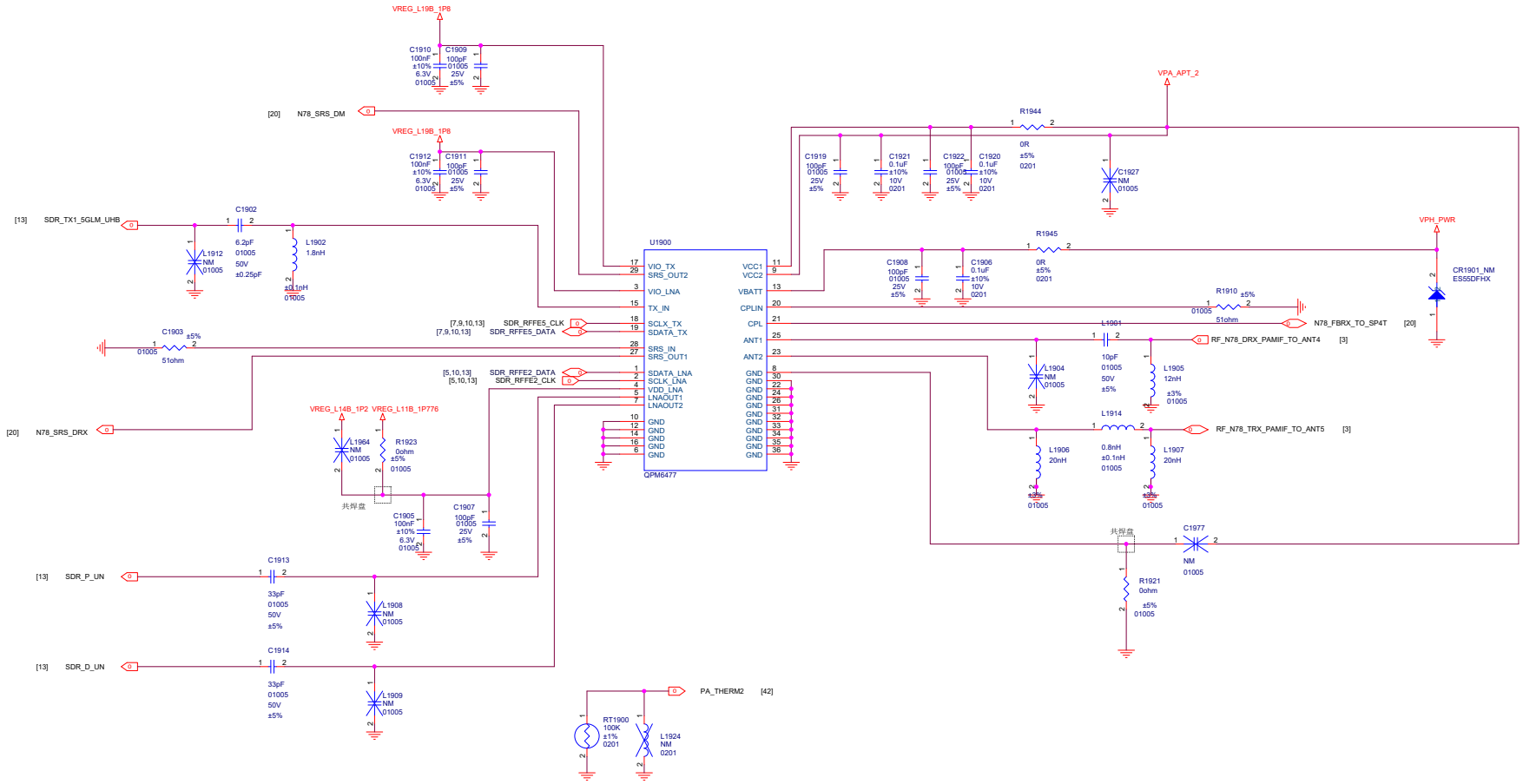

Title	L9D/L27S_MAIN_TEST	
Size A2	Document Number 5G N77 N79	Rev P0
Date:	Sheet 19 of 62	

FBRX

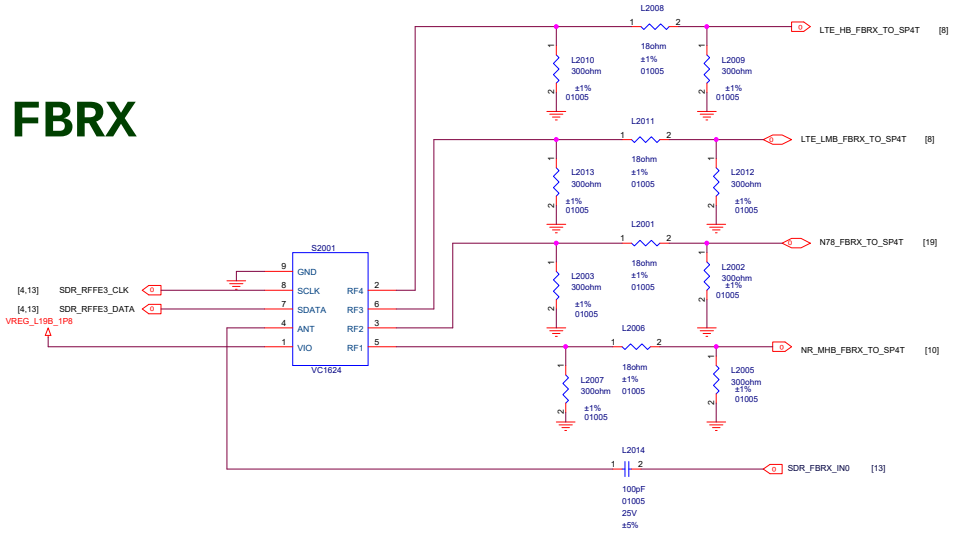

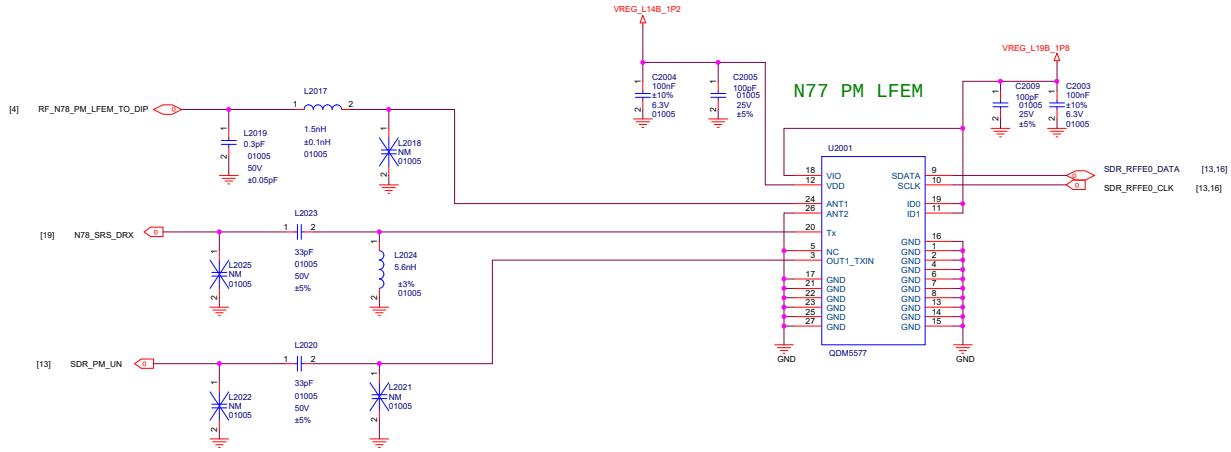

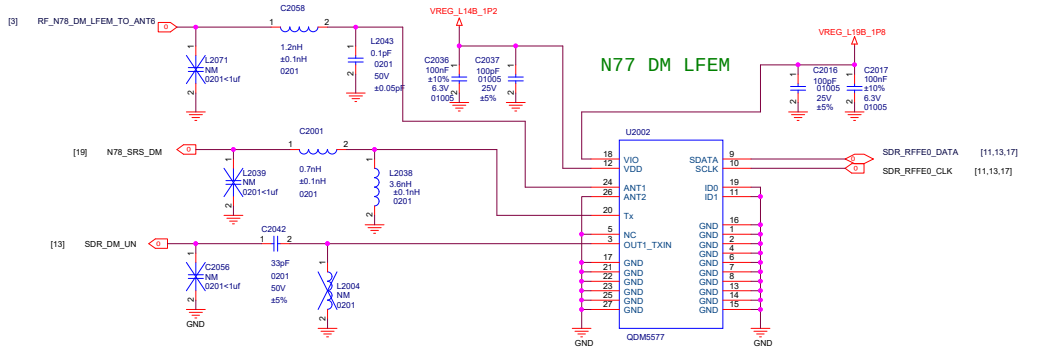

Title	L9D/L28S_MAIN_TEST	
Size A2	Document Number 5G N77 N79 MIMO	Rev P0
Date:	Sheet 20 of 82	

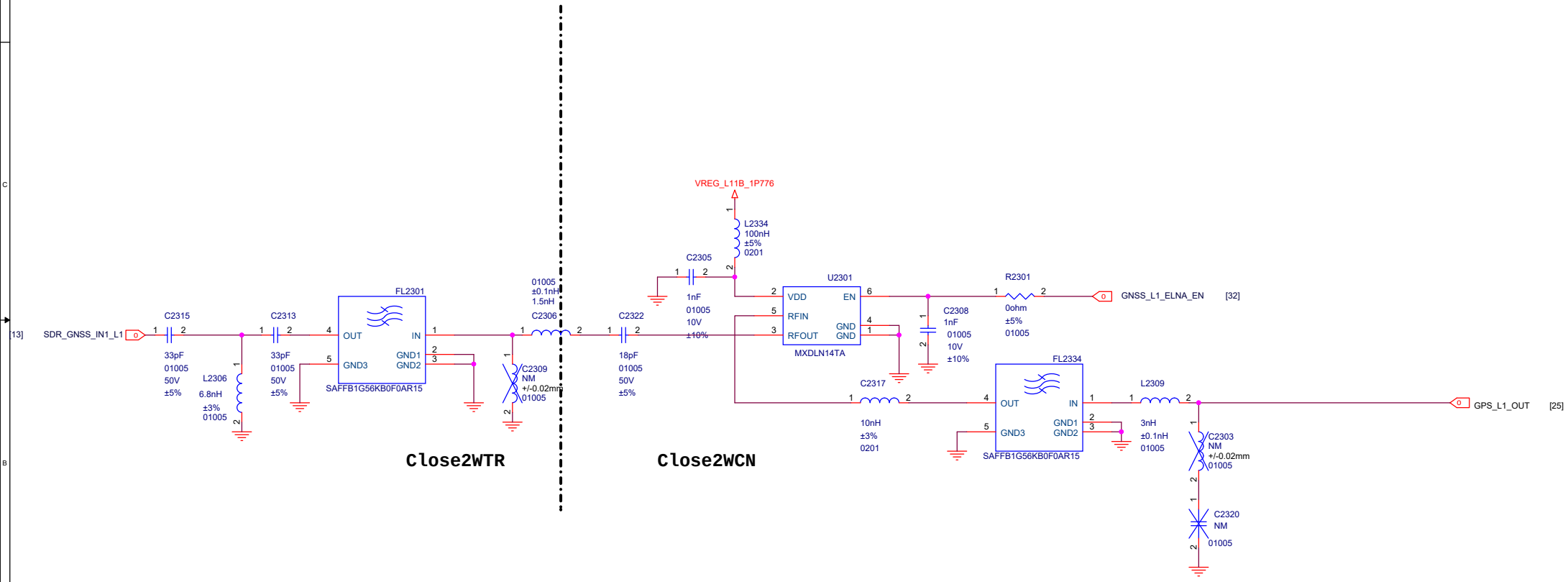

Title	L9/L9B_INT_MAIN	
Size A3	Document Number GPS	Rev P0
Date:	Sheet 22 of 74	

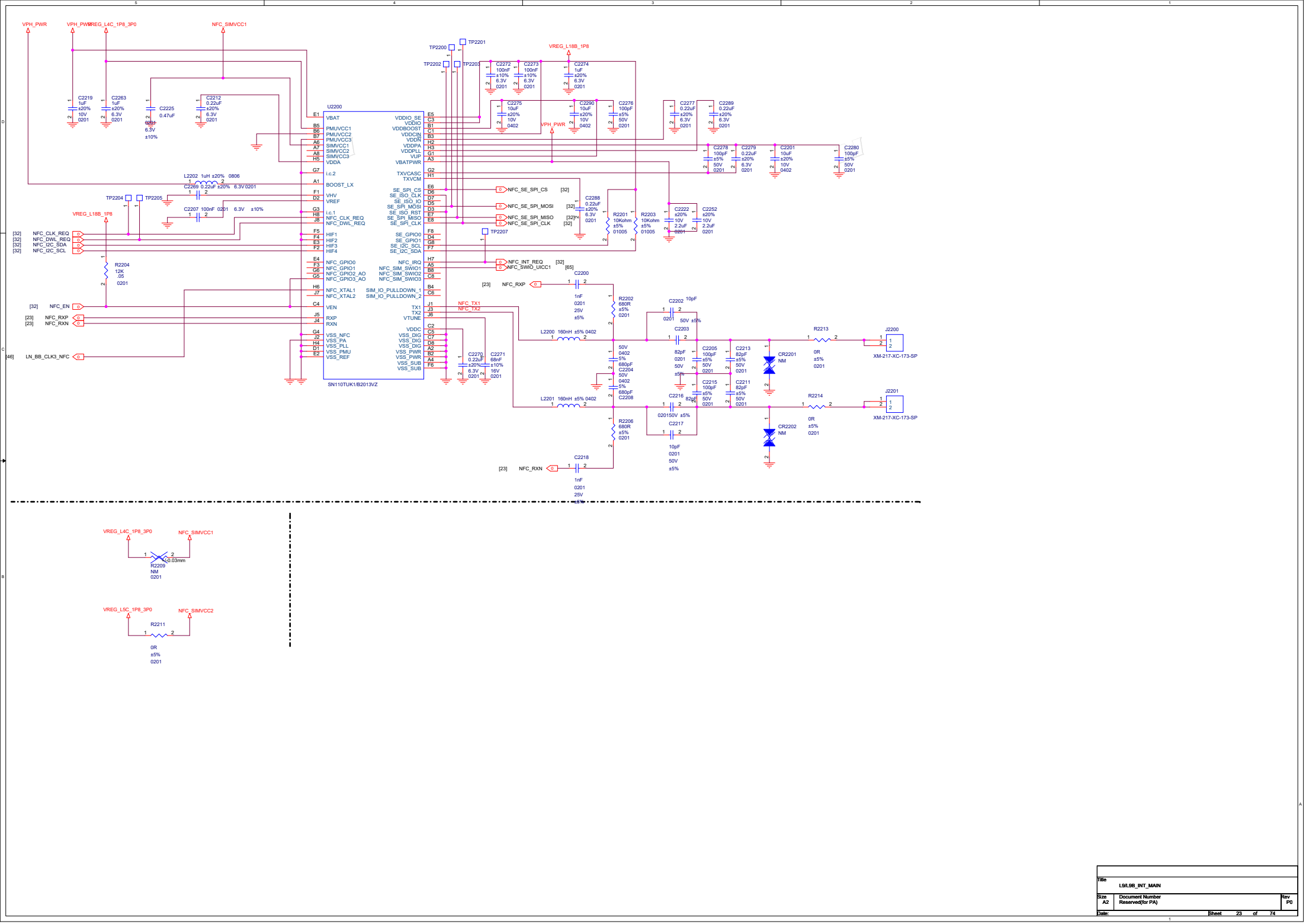

Title	L9/L9B_INT_MAIN
Size A2	Document Number Reserved(for PA)
Rev P0	
Date:	Sheet 23 of 74

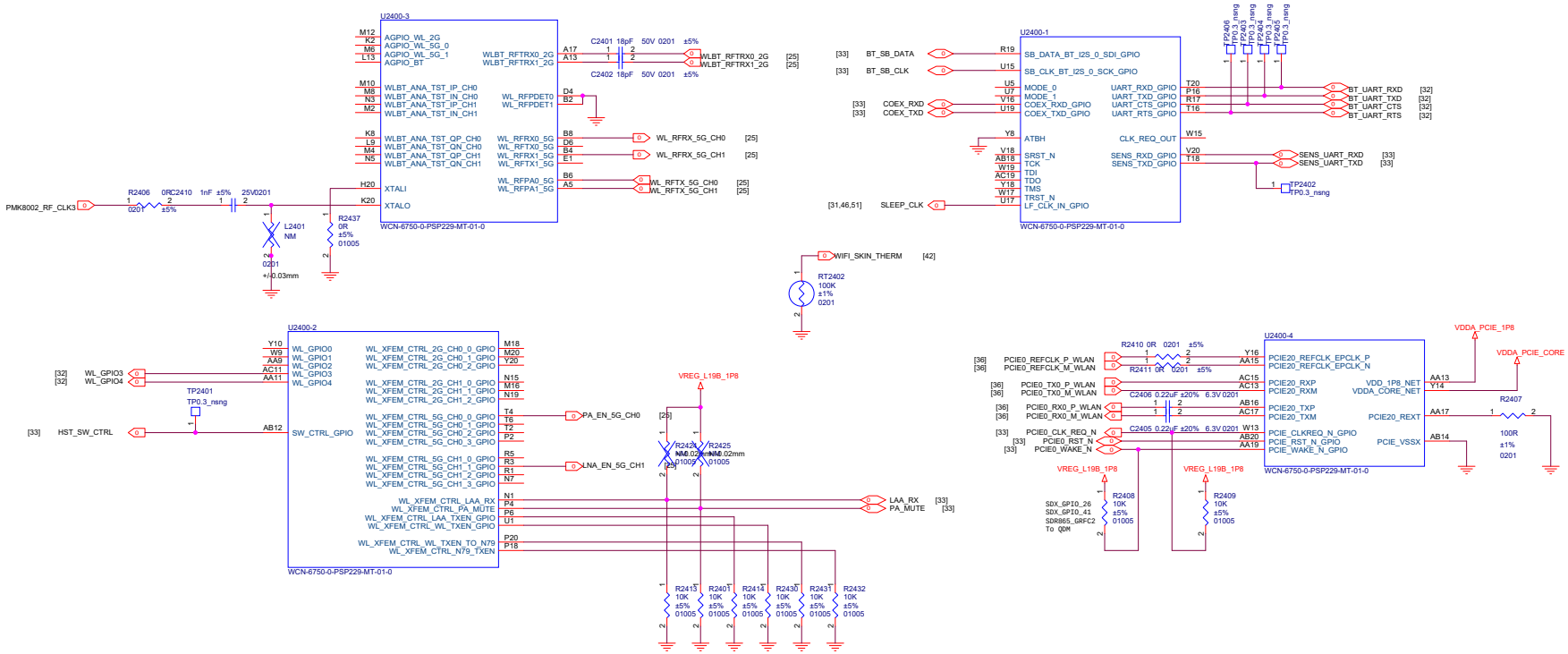

Title	K11A_MAIN		
Size A2	Document Number WIFI Interface		Rev P1
Date:		Sheet 24 of 76	

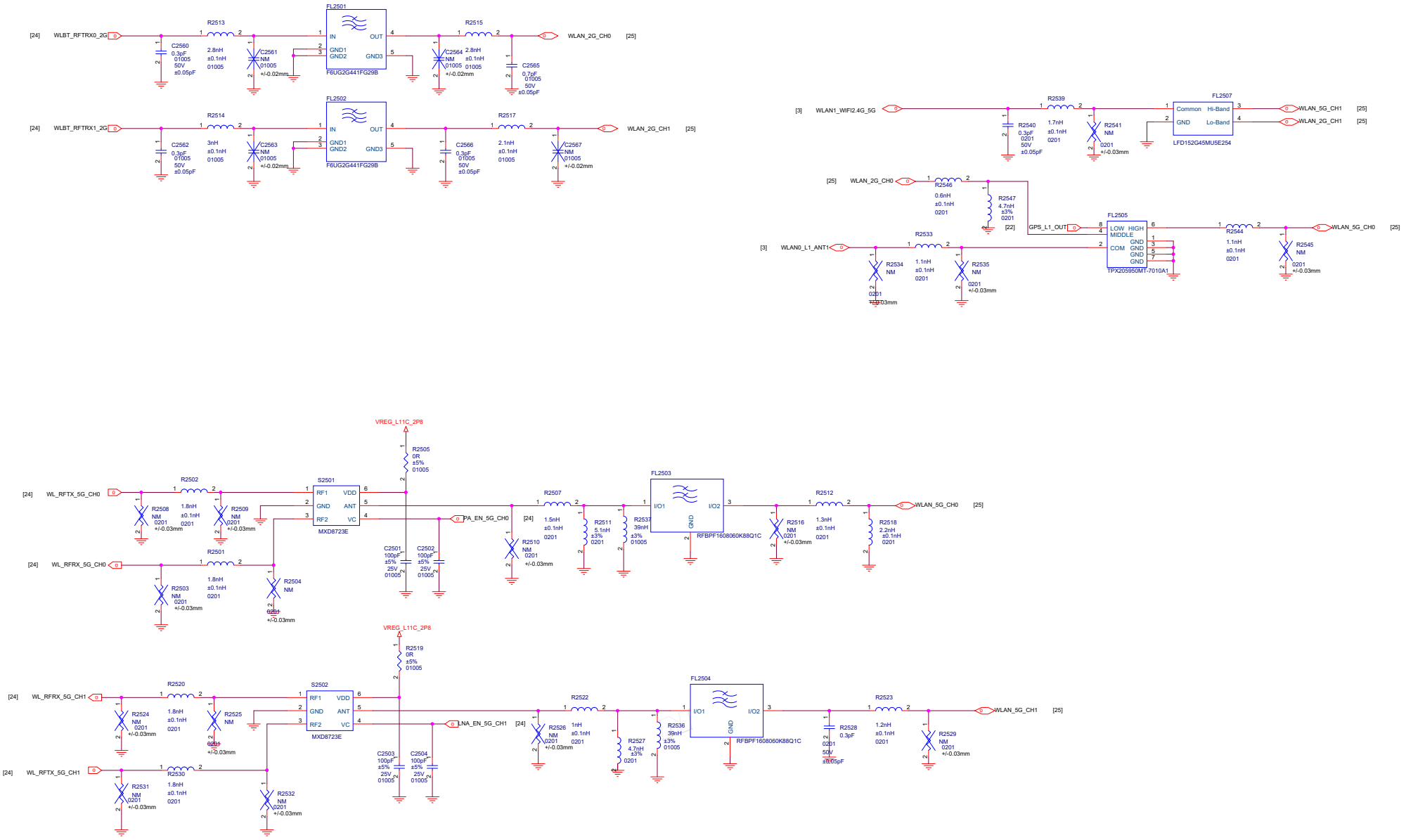

Title	K11A_MAIN	
Size A2	Document Number Reserved(for 11ad/11ax)	Rev P1
Date:	Sheet 25 of 76	

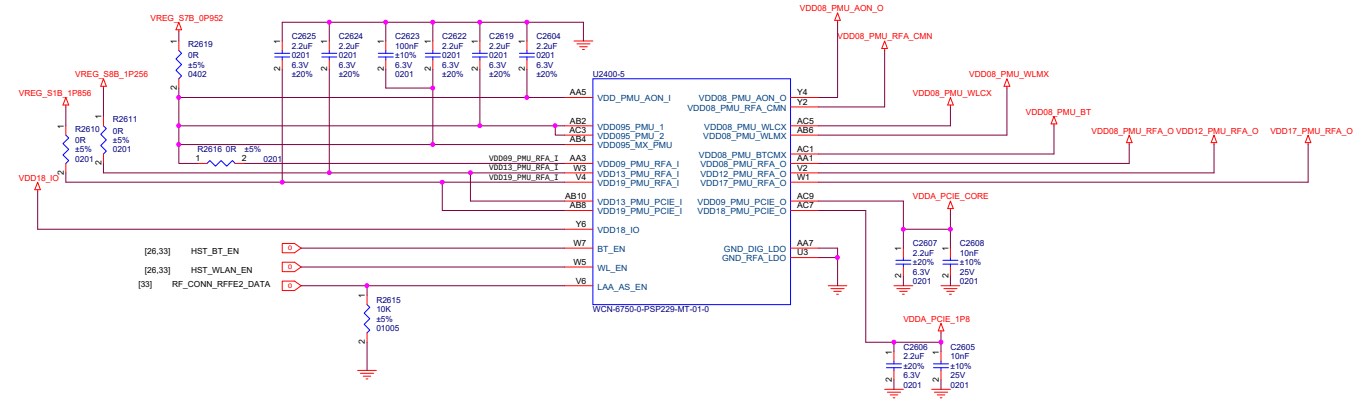

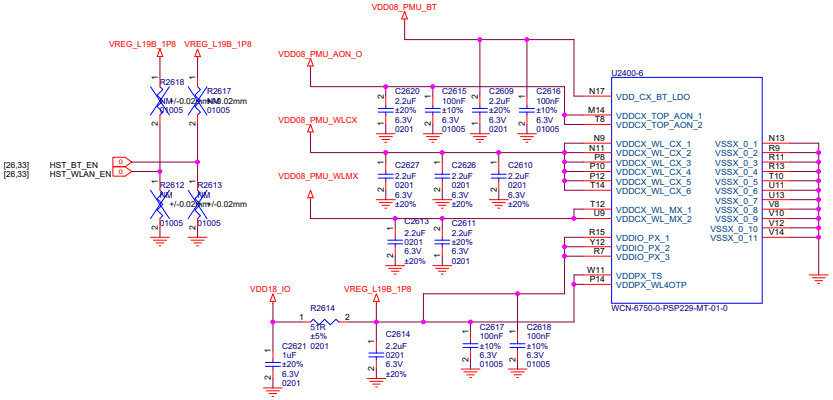

Title	K11A_MAIN
Size A2	Document Number WIFI Decouping
Rev	P1
Date:	Sheet 26 of 76

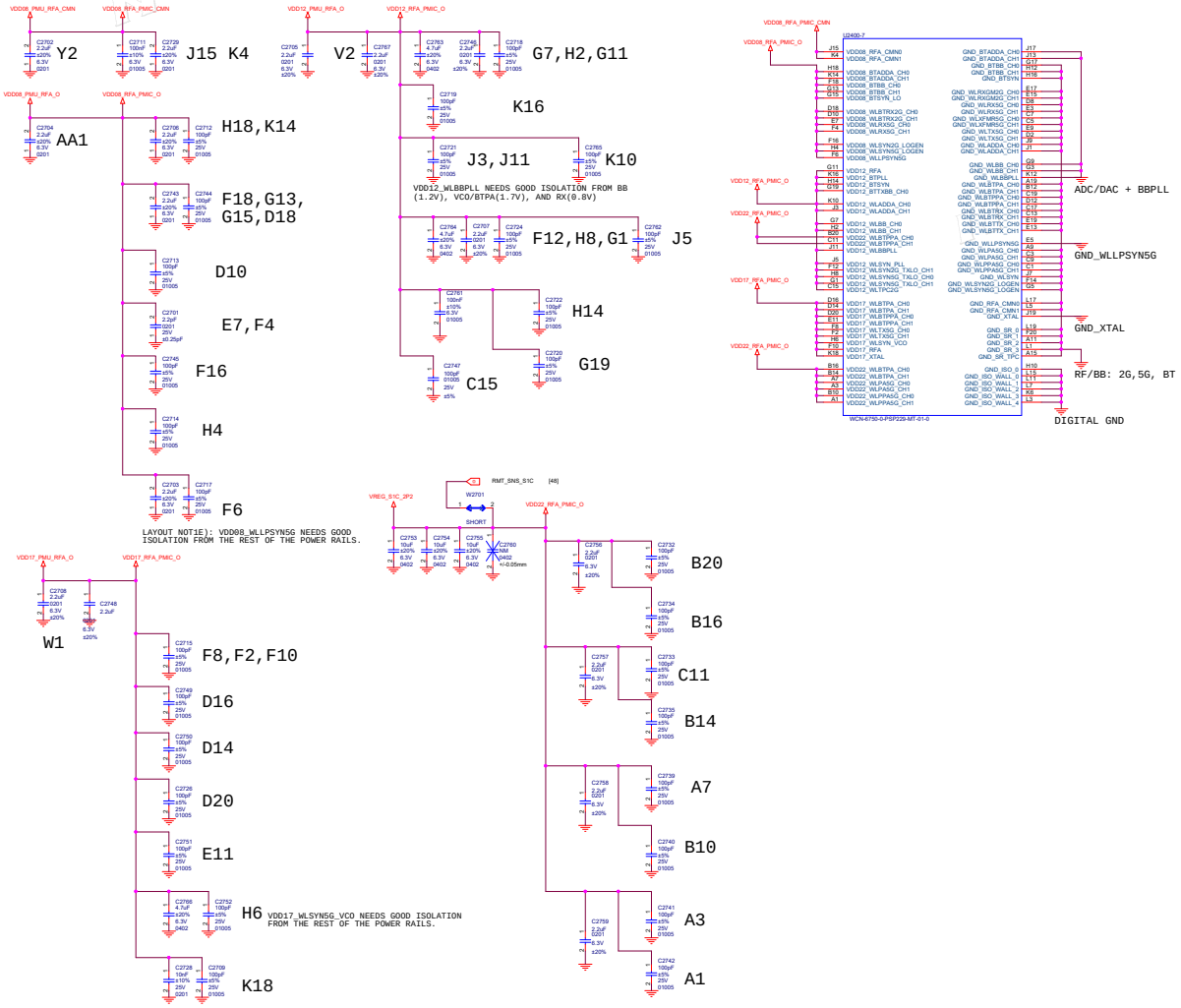

File	K11A_MAIN
Size	A1
Document Number	Reserved(for 11ad/11ax)
Rev	P1
Date:	
Sheet	27 of 78

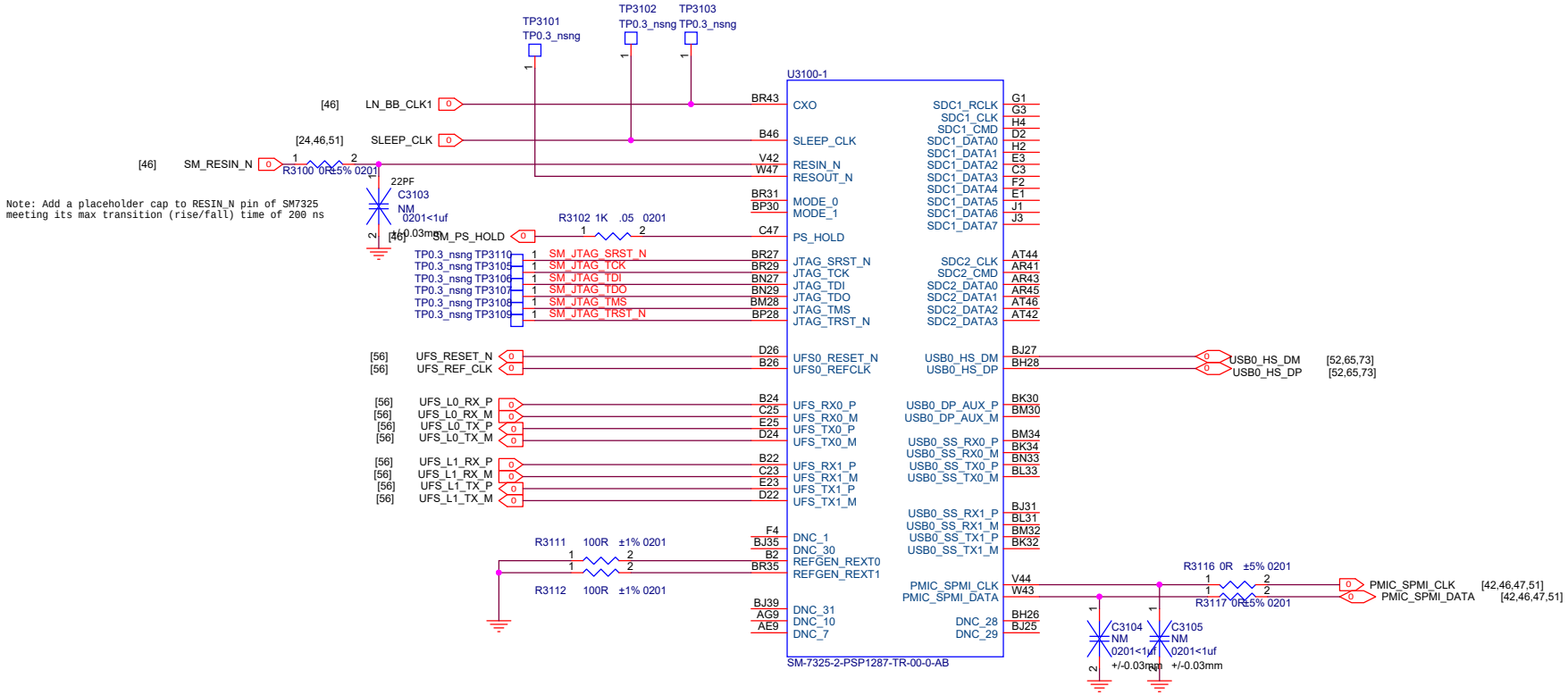

MSM skin temperature thermistor

Quiet thermistor Place on a cool place

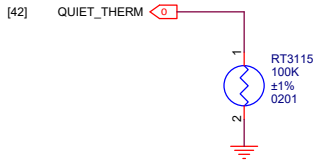

Title	L9/L9B_INT_MAIN	
Size A3	Document Number SM8350 Control	Rev P0
Date:	Sheet 31 of 74	

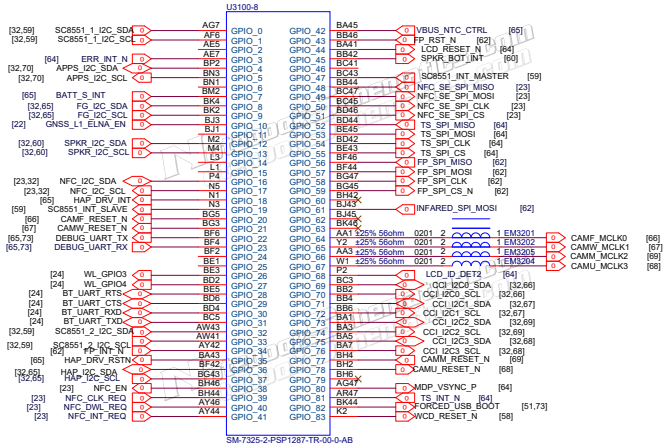

PM8008 I2C

SPK I2C

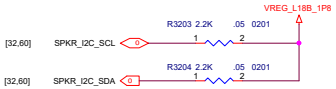

HAP I2C

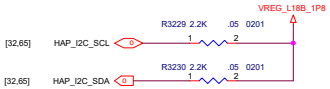

Front Camera I2C0

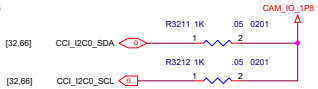

NFC I2C

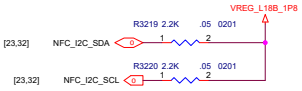

Charger

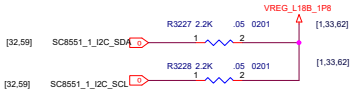

I2C FOR MAG SAR SENSOR

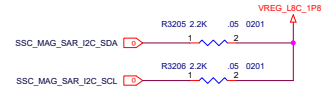

WIDE Camera I2C1

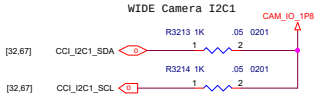

Charger

MACRO Camera I2C2

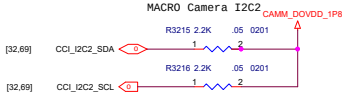

I2C FOR FRONT_ALS SENSOR

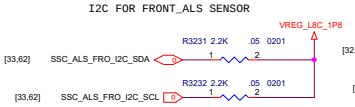

ULTRA Camera I2C3

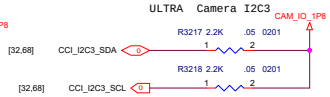

GPIO_118	BOOT_CONFIG(0)	WDOG_DISABLE
GPIO_120	BOOT_CONFIG(1)	FASTBOOT_SEL(0)
GPIO_122	BOOT_CONFIG(2)	FASTBOOT_SEL(1)
GPIO_124	BOOT_CONFIG(3)	FASTBOOT_SEL(2)
GPIO_82	N/A	FORCE_USB_BOOT
GPIO_139		FORCED_USB_BOOT_SELECT

Title	L9/L9B_INT_MAIN	
Size A2	Document Number SDM855 GPIO-1	Rev P0
Date:	Sheet 32 of 74	

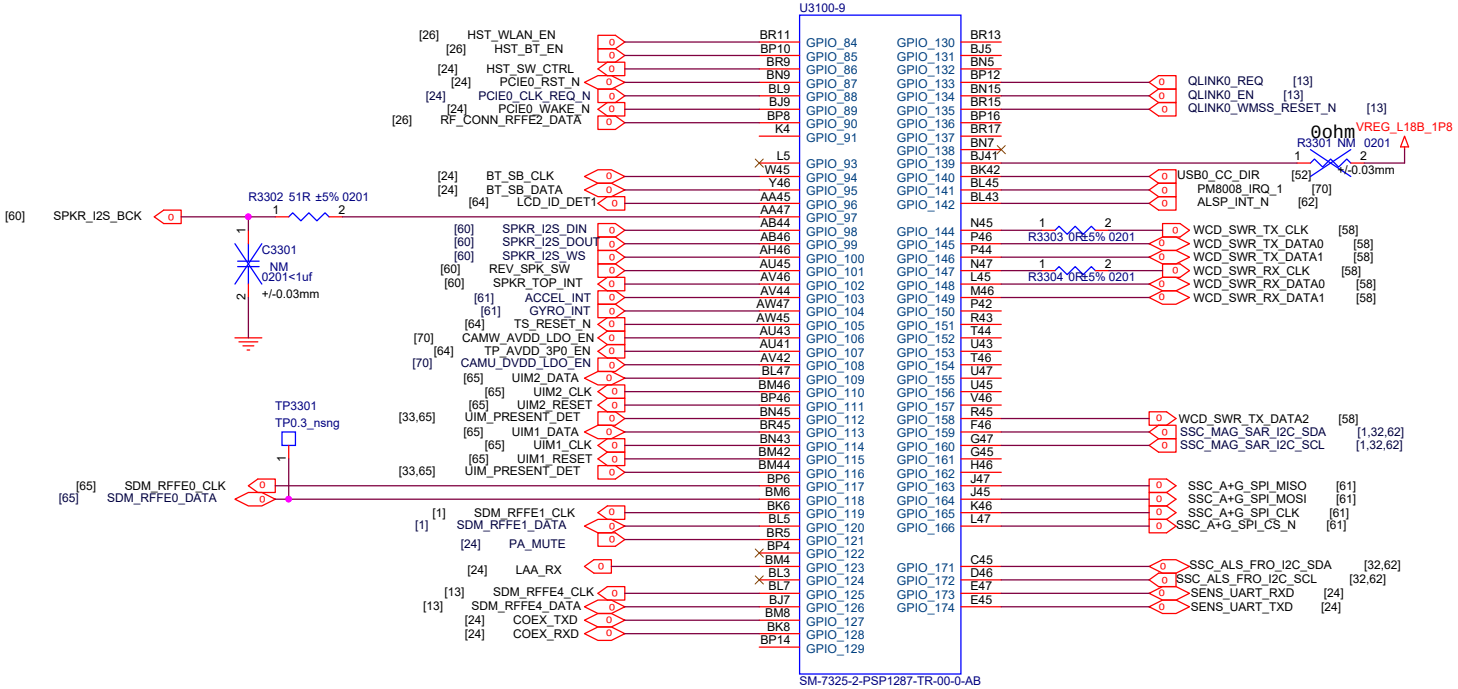

Title	L9/L9B_INT_MAIN
Size A3	Document Number SDM855 GPIO-2
Rev	P0
Date:	Sheet 33 of 74

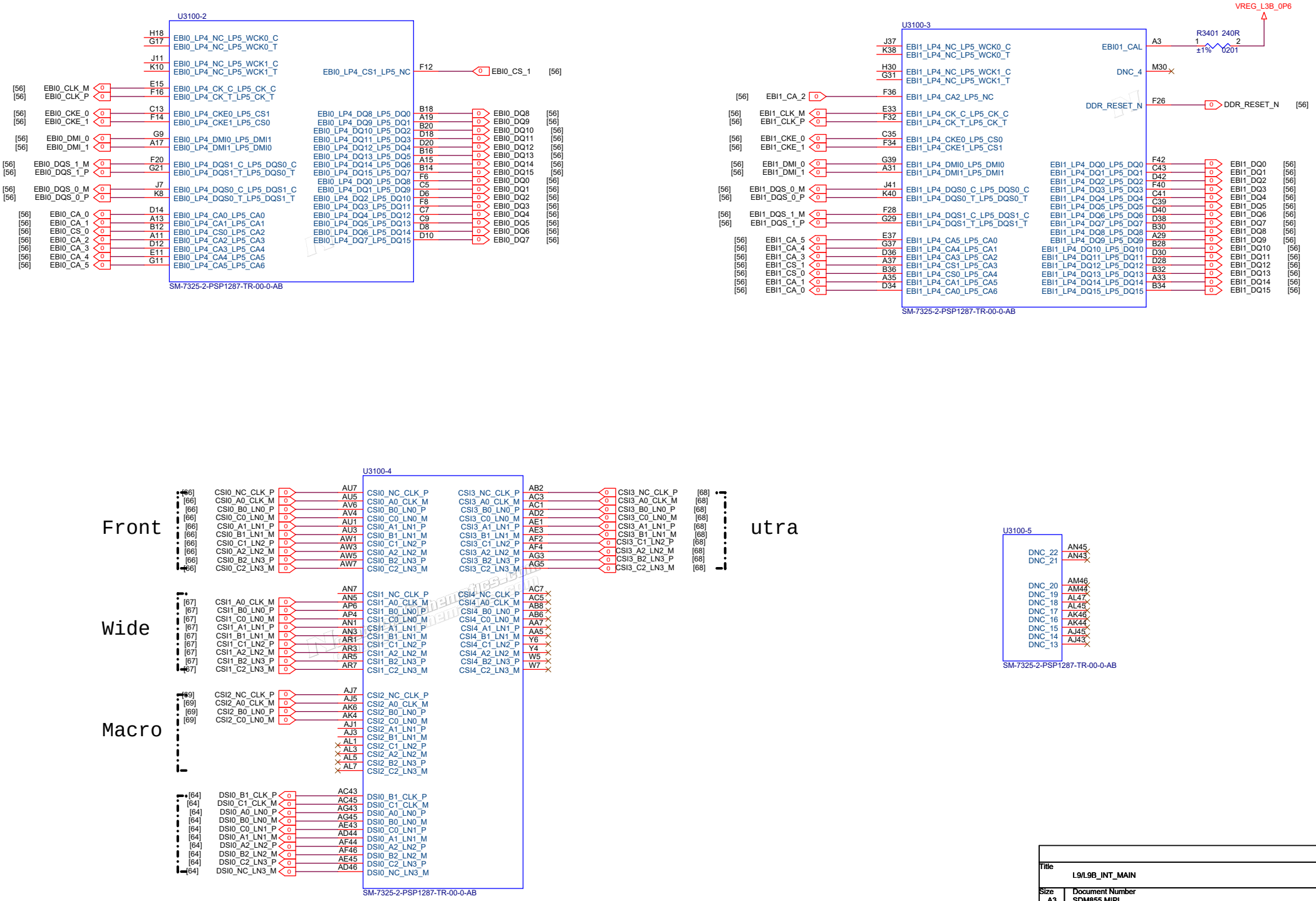

Title	L9/L9B_INT_MAIN
Size A3	Document Number SDM855 MIPI
Rev	P0
Date:	Sheet 34 of 74

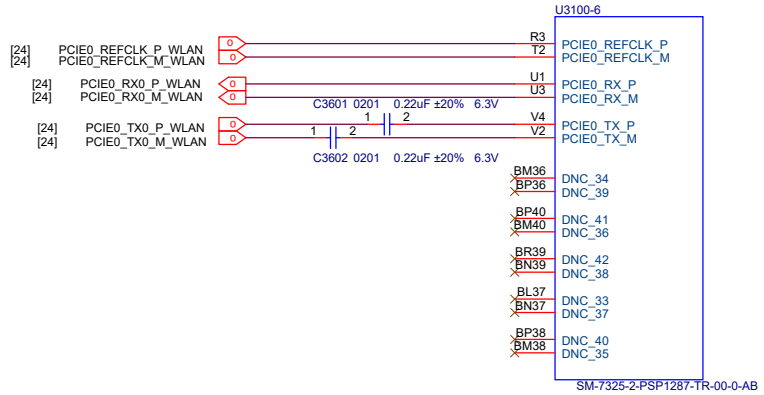

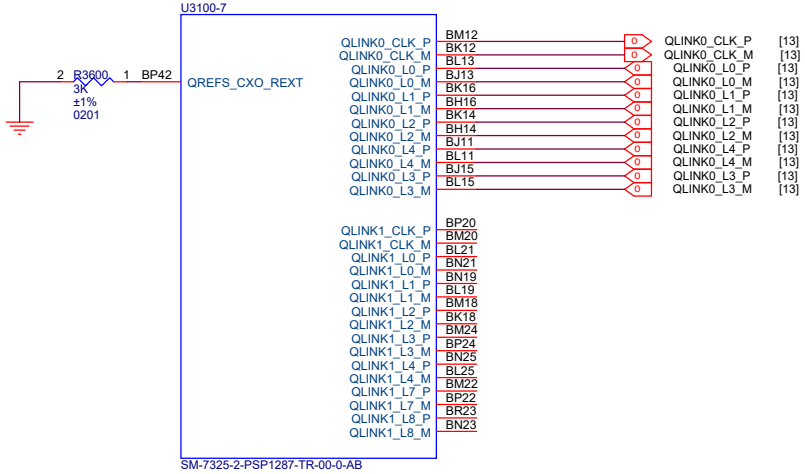

Title	M20_MAIN	
Size A3	Document Number SDM855 RF INTF	Rev P0
Date:	Sheet 36 of 74	

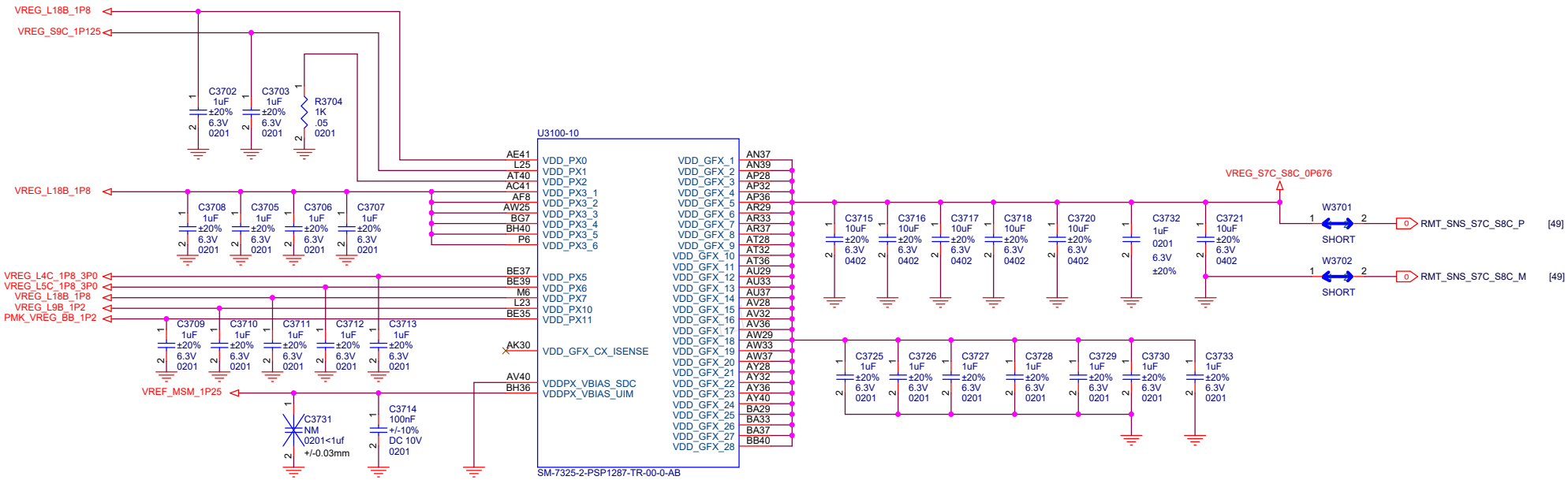

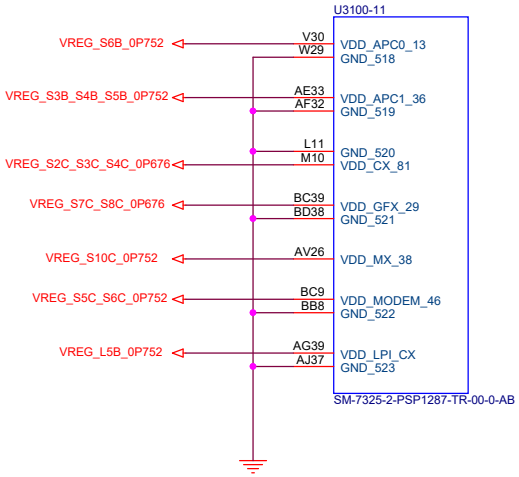

Title	M20_MAIN	
Size A3	Document Number SDM855 PWR1	Rev P0
Date:	Sheet 37 of 74	

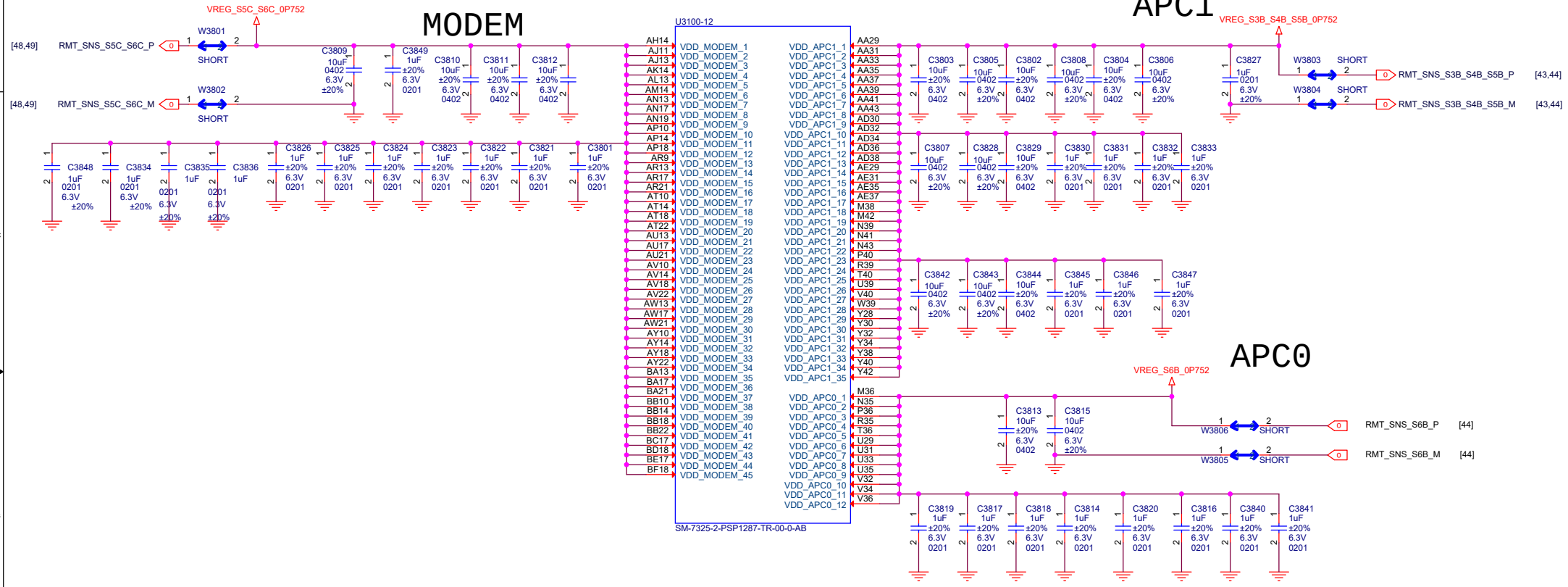

Title	M20_MAIN
Size A3	Document Number SDM855 PWR2
Rev	P0
Date:	Sheet 38 of 74

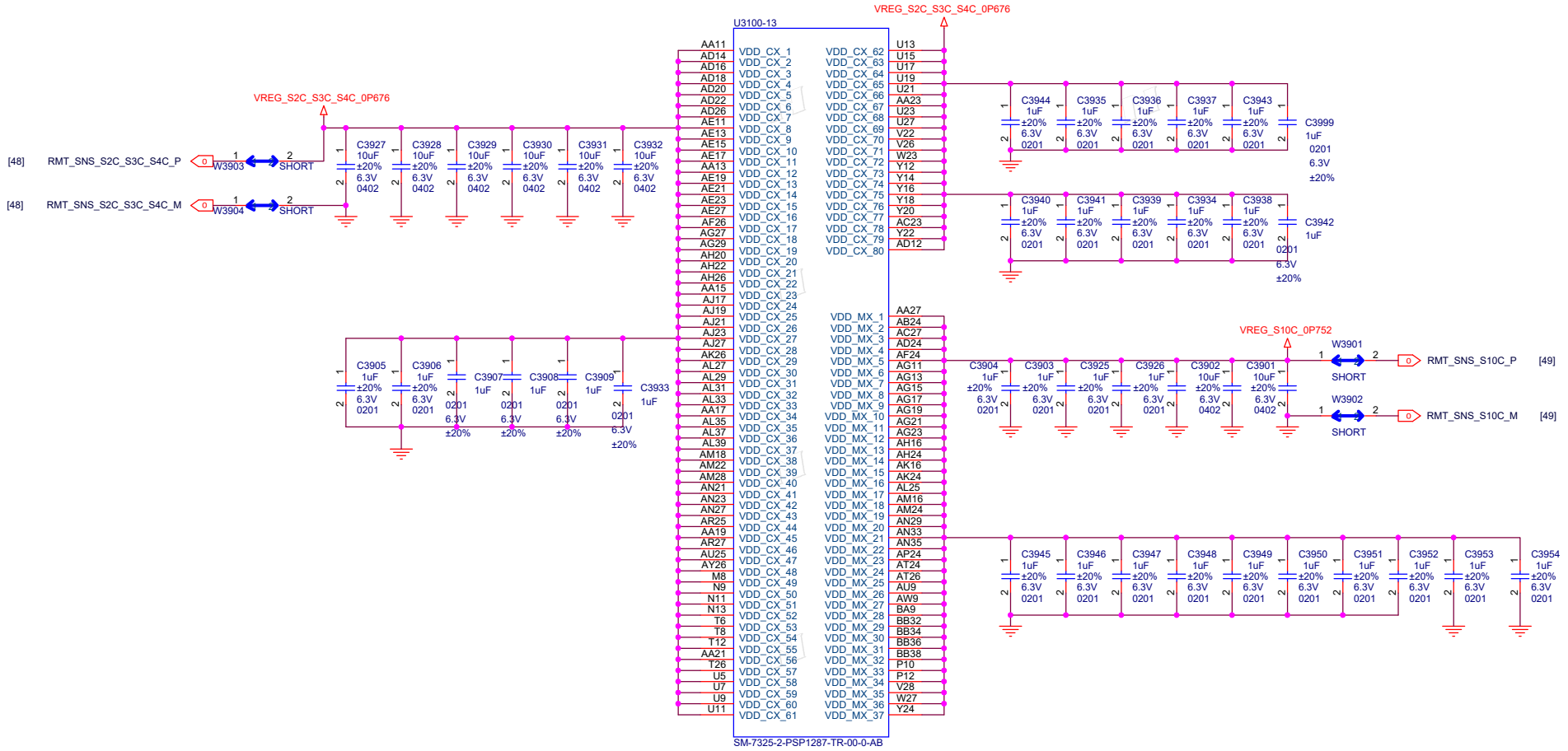

Title	M20_MAIN
Size A3	Document Number SDM855 PWR3
Rev	P0
Date:	Sheet 39 of 74

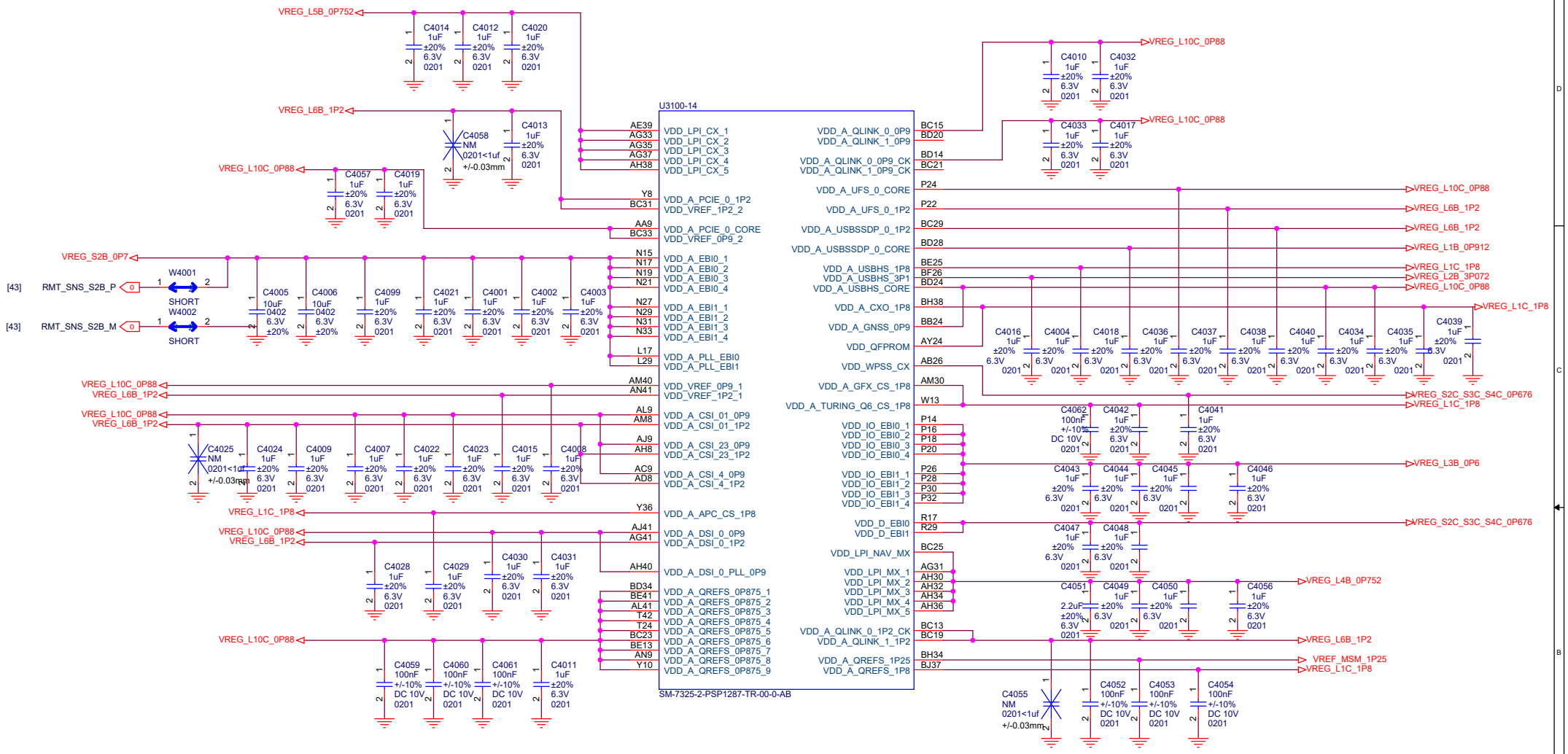

Title	M20_MAIN
Size A3	Document Number SDM855 PWR4
Rev	P0
Date:	Sheet 40 of 74

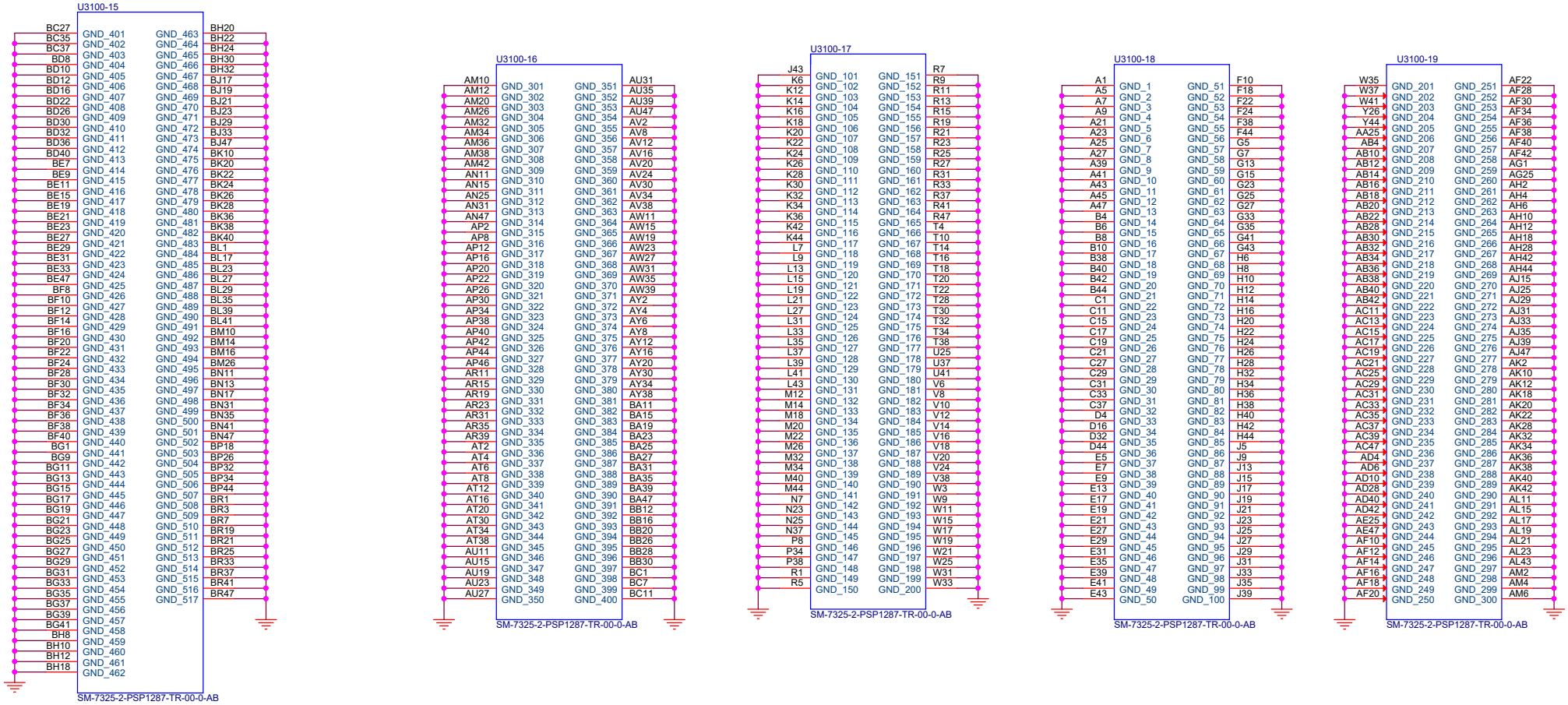

Title	M20_MAIN	
Size A3	Document Number SDM855 GND	Rev P0
Date:	Sheet 41 of 74	

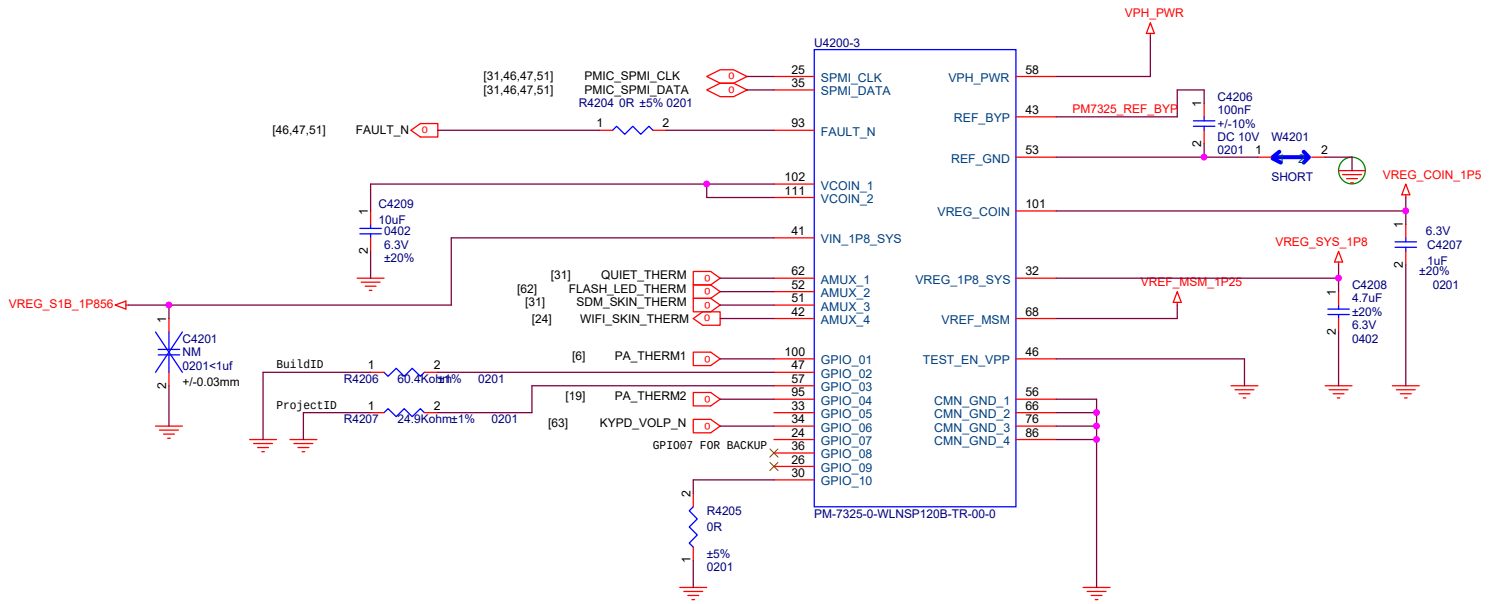

Title	M20_MAIN	
Size A3	Document Number PM855 XO&CTRL	Rev P0
Date:	Sheet 42 of 74	

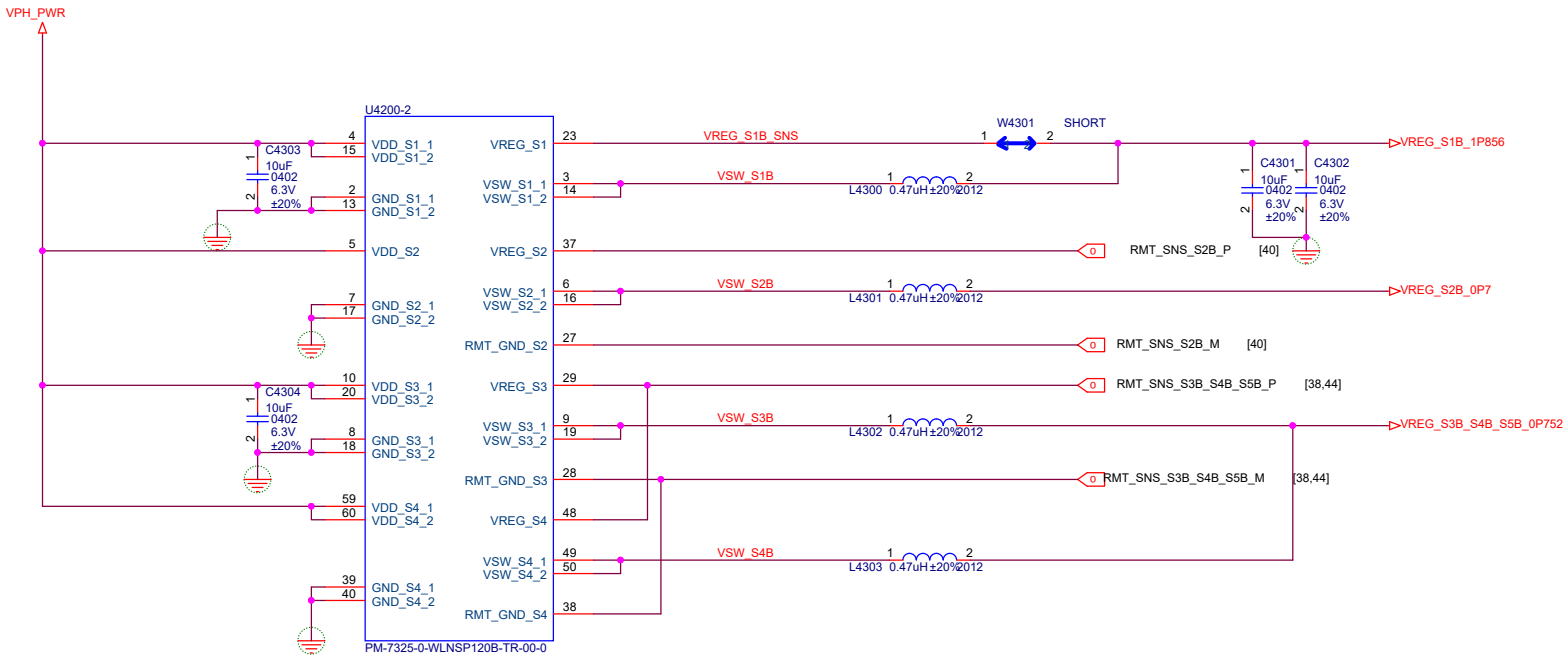

Title	M20_MAIN	
Size A3	Document Number PM855 BUCK CONVERTER1	Rev P0
Date:	Sheet 43 of 74	

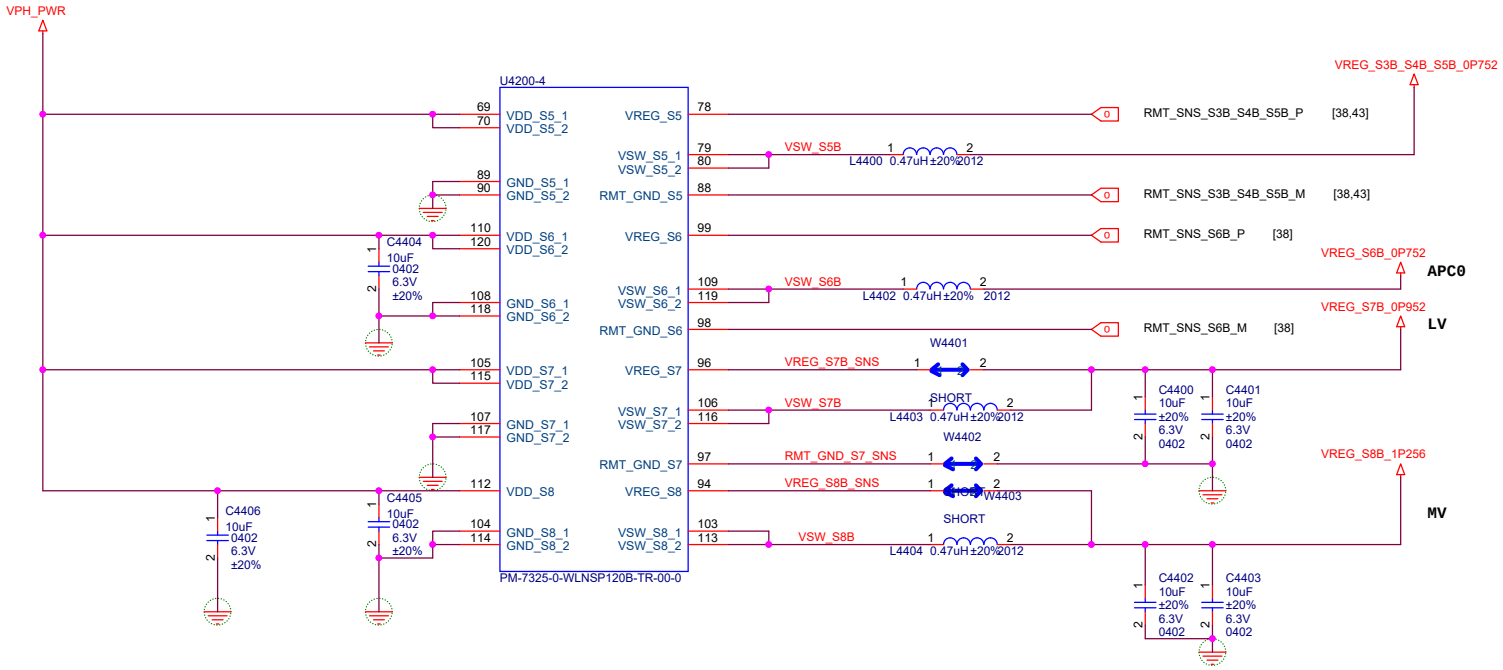

Title	M20_MAIN	
Size A3	Document Number PM855 BUCK CONVERTER2	Rev P0
Date:	Sheet 44 of 74	

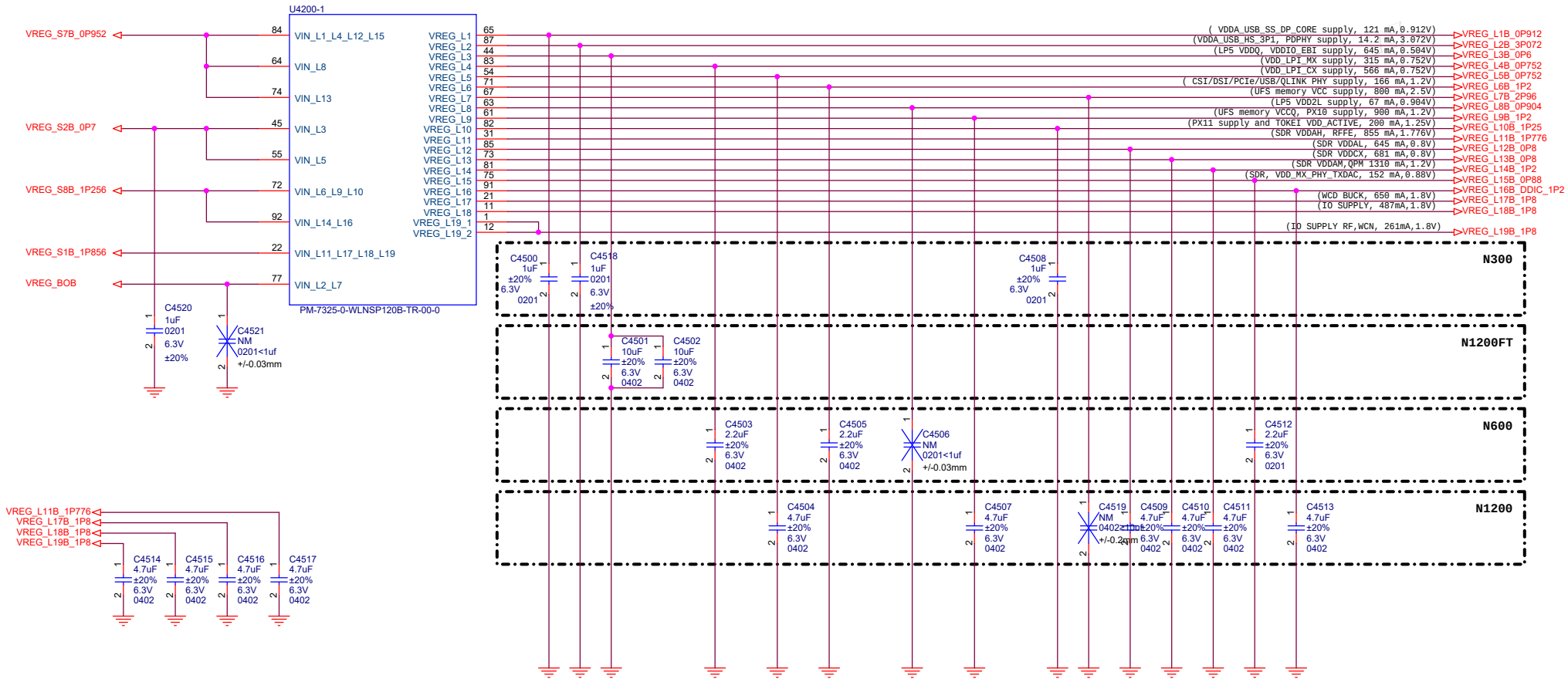

Title	M20_MAIN	
Size A3	Document Number PM855 LDOs	Rev P0
Date:	Sheet 45 of 74	

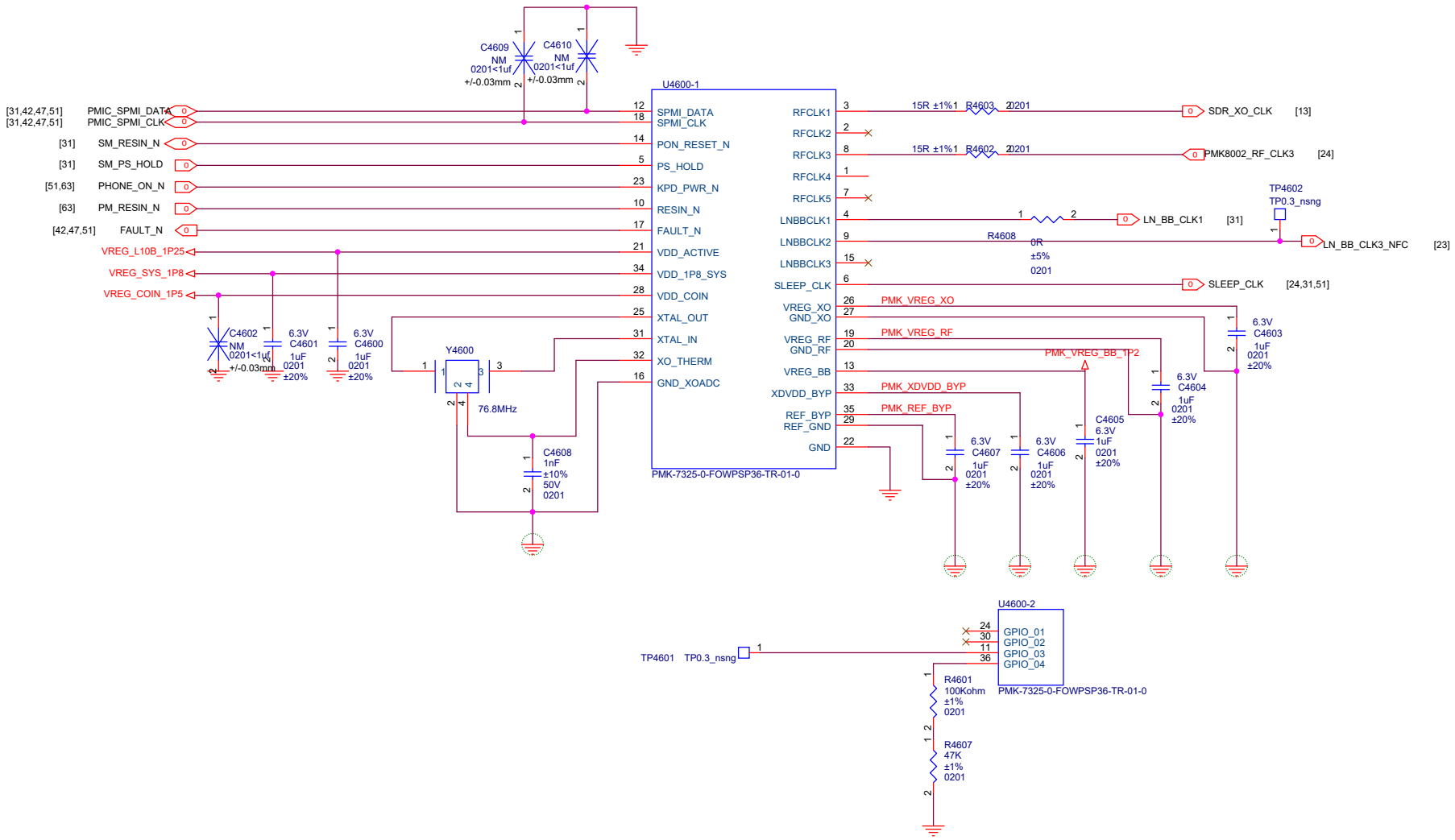

Option	Resistor Value (Ω)*	LPDDR Option	External Buck Option**	SD Card Option
1	3240	LPDDR5	PM3003A is not used	SD card LDO enabled
2	10200	LPDDR5	PM3003A is not used	Skip SD Card LDO enable
3	18700	LPDDR5	PM3003A is used	SD card LDO enabled
4	28000	LPDDR5	PM3003A is used	Skip SD Card LDO enable
5	113000	LPDDR4X	PM3003A is not used	SD card LDO enabled
6	147000	LPDDR4X	PM3003A is not used	Skip SD Card LDO enable
7	191000	LPDDR4X	PM3003A is used	SD card LDO enabled
8	255555	LPDDR4X	PM3003A is used	Skip SD Card LDO enable

Title: M20_MAIN

Size: A3 | Document Number: PM855 GPIO&GND | Rev: P0

Date: | Sheet 46 of 74

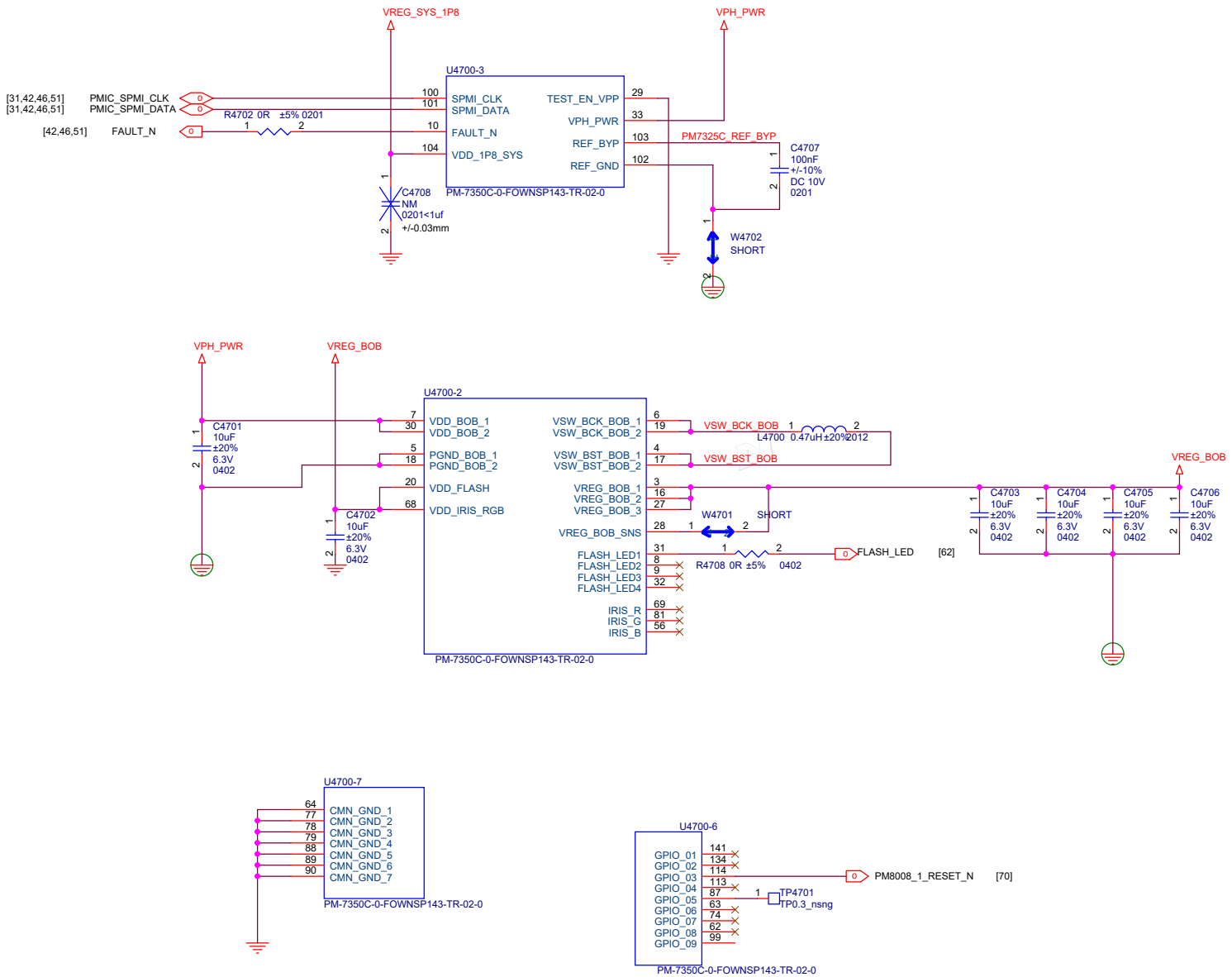

Title	M20_MAIN	
Size A3	Document Number PM855A CTRL&GND	Rev P0
Date:	Sheet 47 of 74	

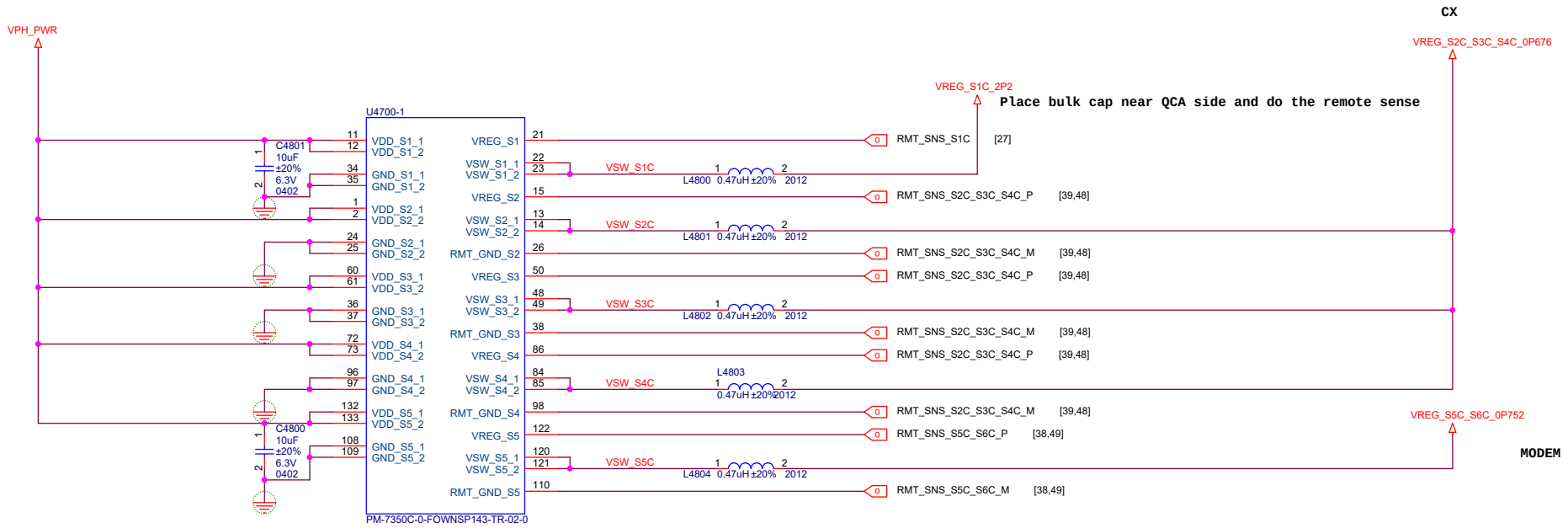

Title	M20_MAIN	
Size A3	Document Number PM855A BUCK CONVERTER1	Rev P0
Date:	Sheet 48 of 74	

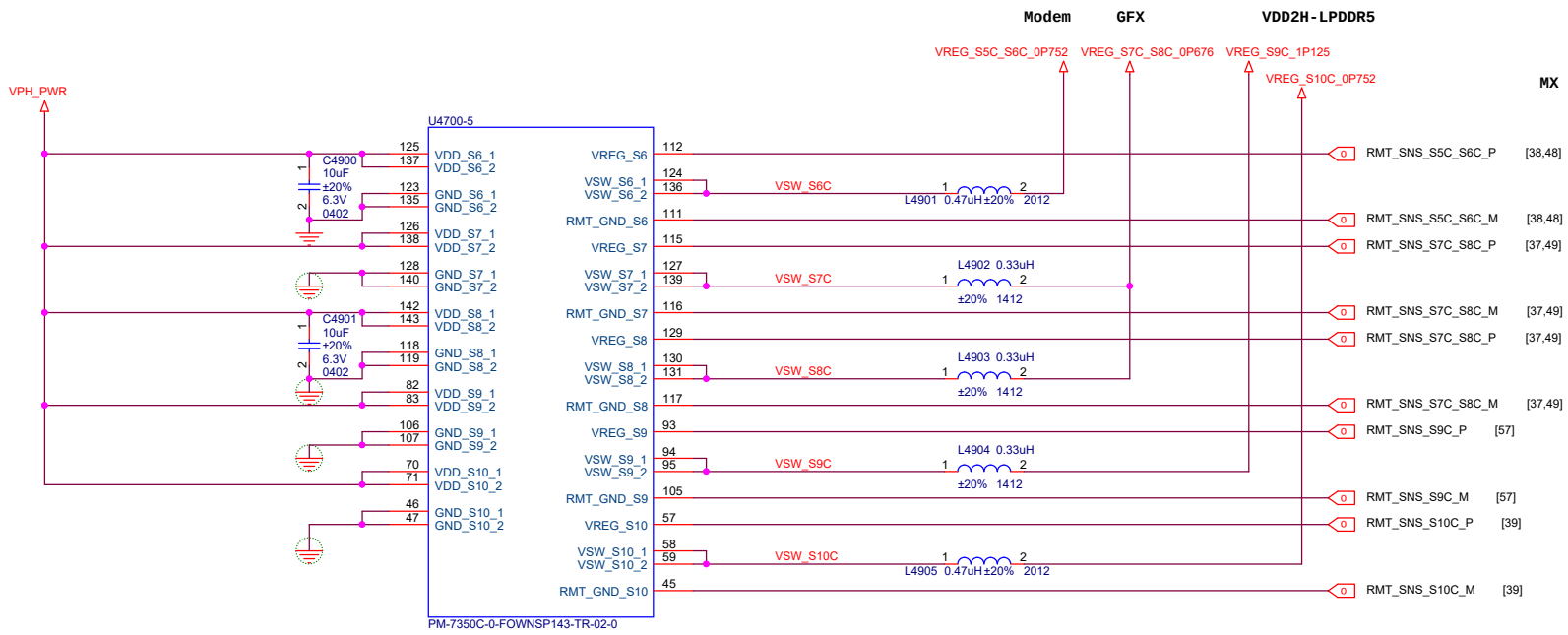

Title	M20_MAIN	
Size A3	Document Number PM855A BUCK CONVERTER2	Rev P0
Date:	Sheet 49 of 74	

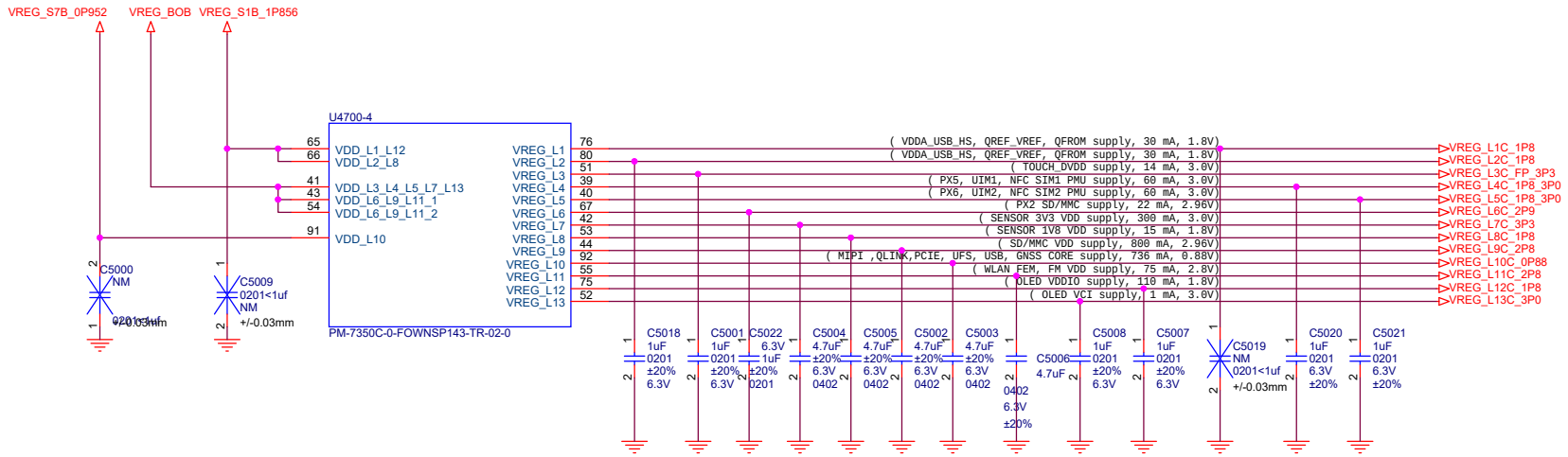

Title	M20_MAIN	
Size A3	Document Number PM855A LDOs	Rev P0
Date:	Sheet 50 of 74	

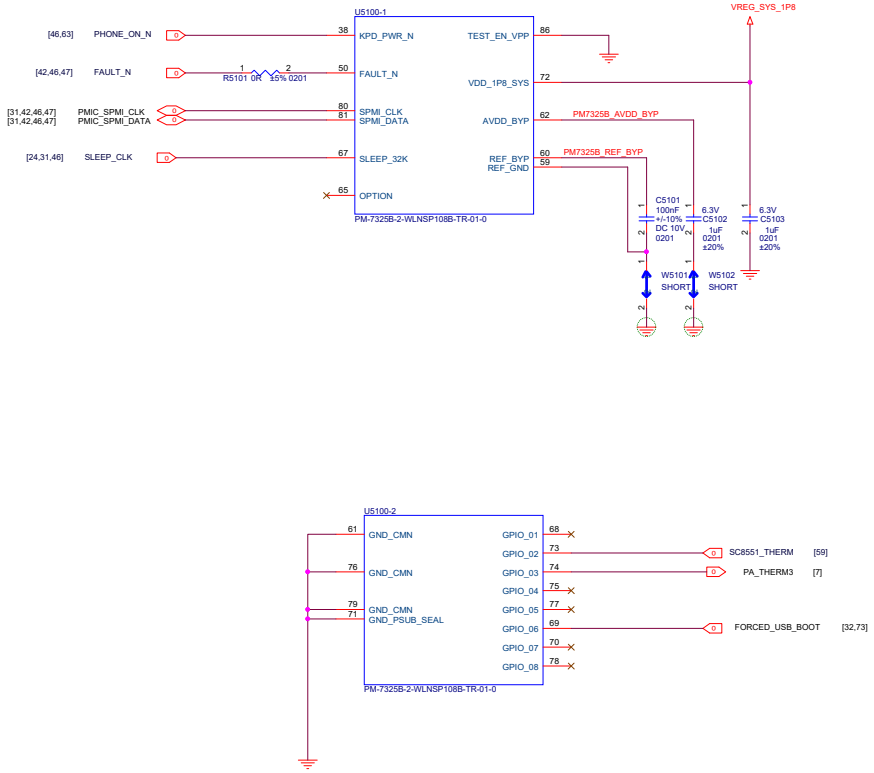

Title	M20_MAIN	
Size A2	Document Number PM7325B CTRL&GND	Rev P0
Date:	Sheet 51 of 80	

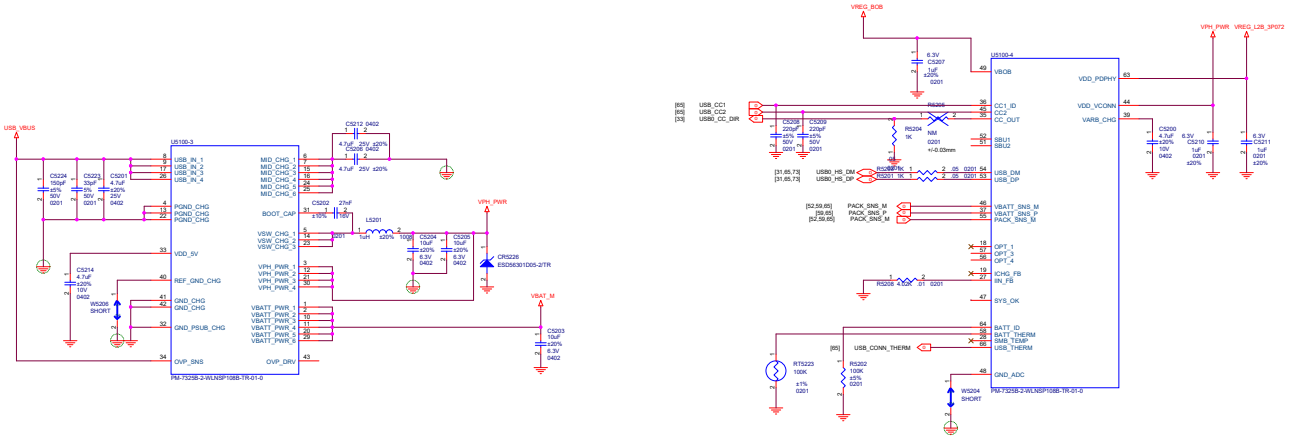

File	M20_MAIN		
Size A1	Document Number PM7325B CHARGER		Rev P0
Date:		Sheet 52 of 80	

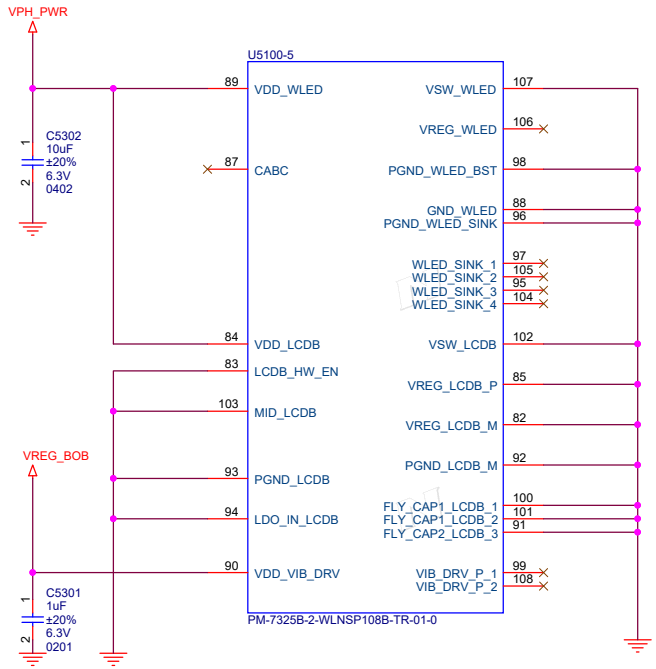

Title	M20_MAIN	
Size A3	Document Number PM7325B LCD	Rev P0
Date:	Sheet 53 of 80	

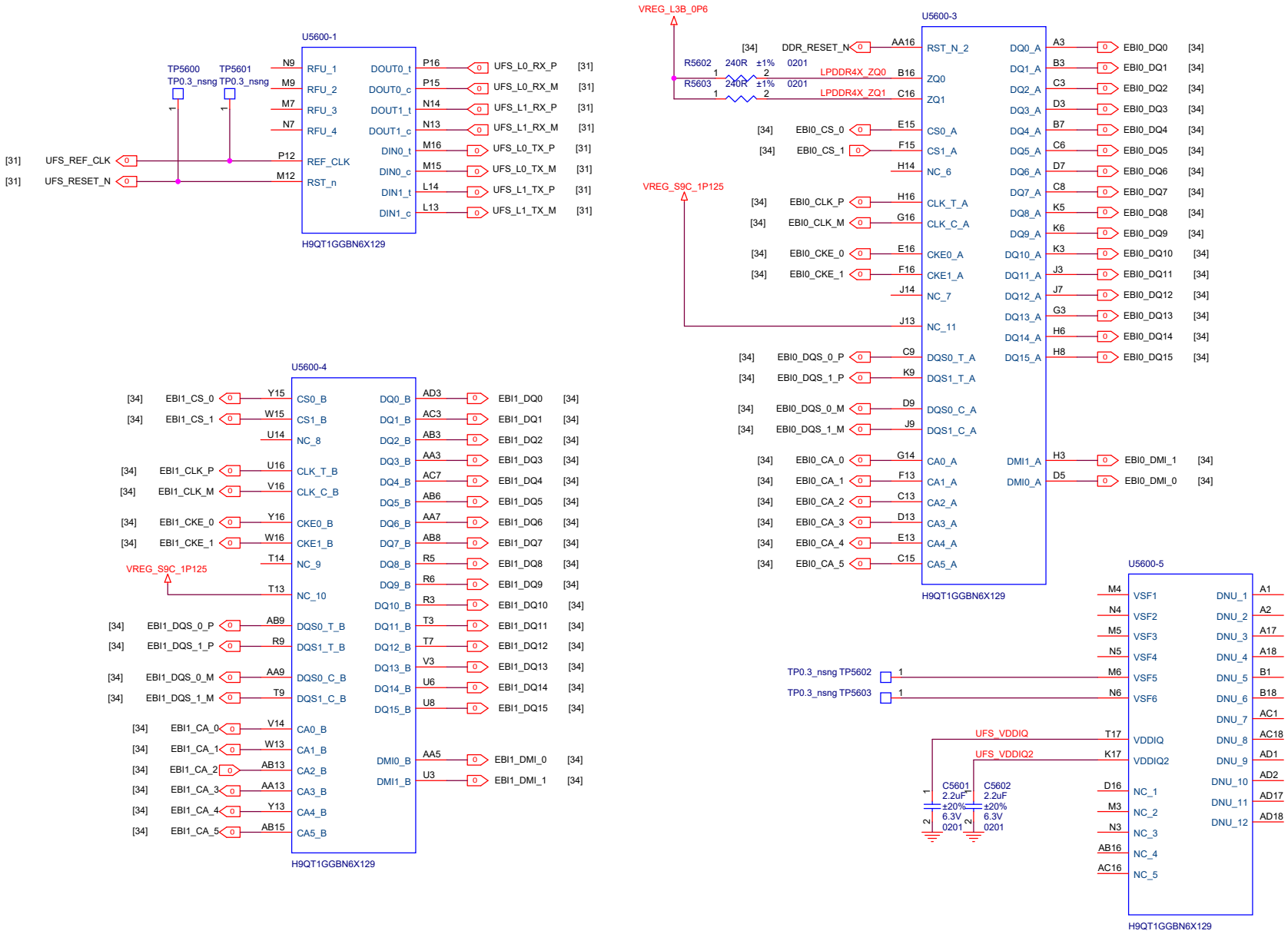

Title	M20_MAIN	
Size A3	Document Number MEMORY	Rev P0
Date:	Sheet 56 of 74	

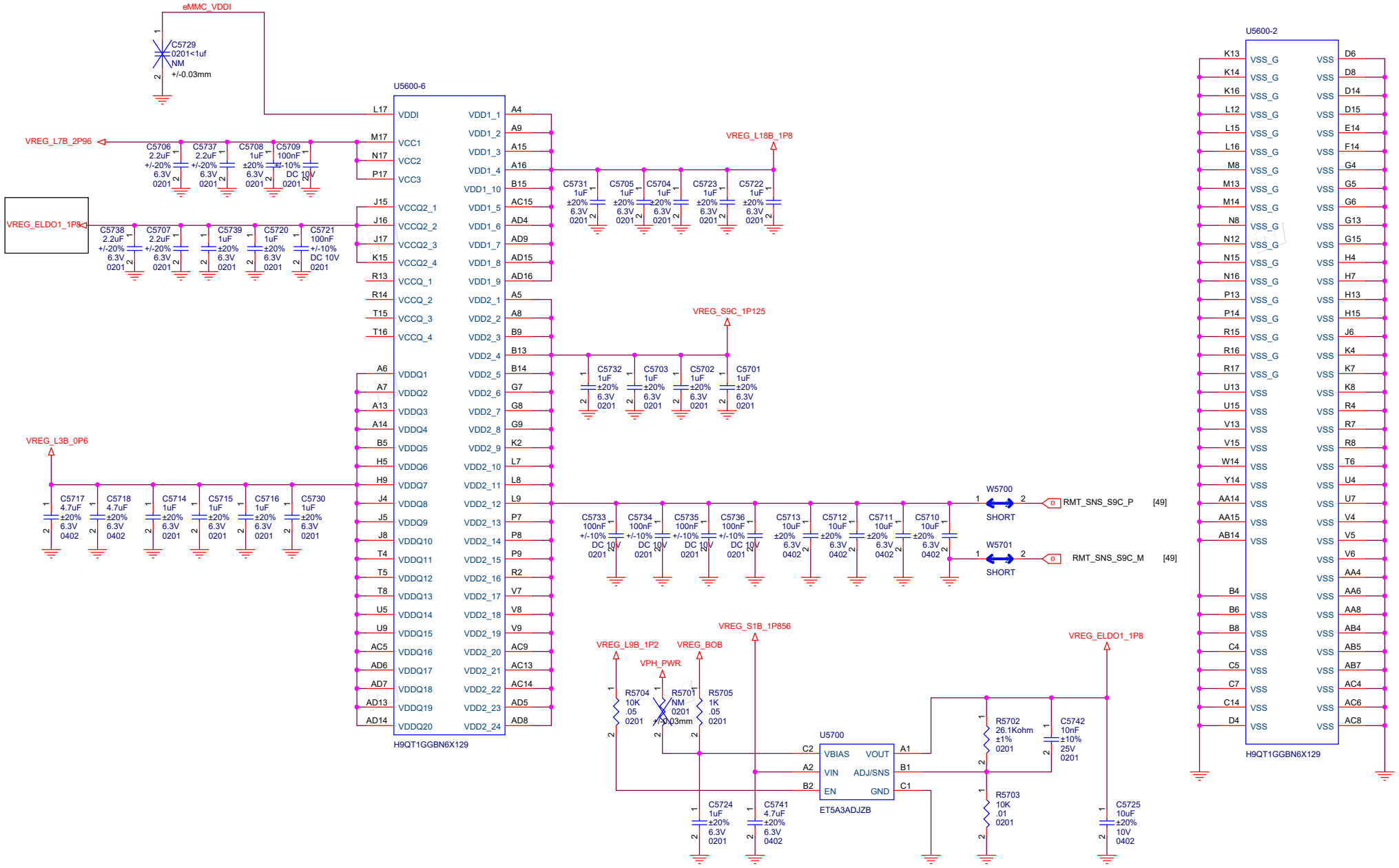

Title	M20_MAIN
Size A3	Document Number MEMORY-2
Rev	P0
Date:	Sheet 57 of 74

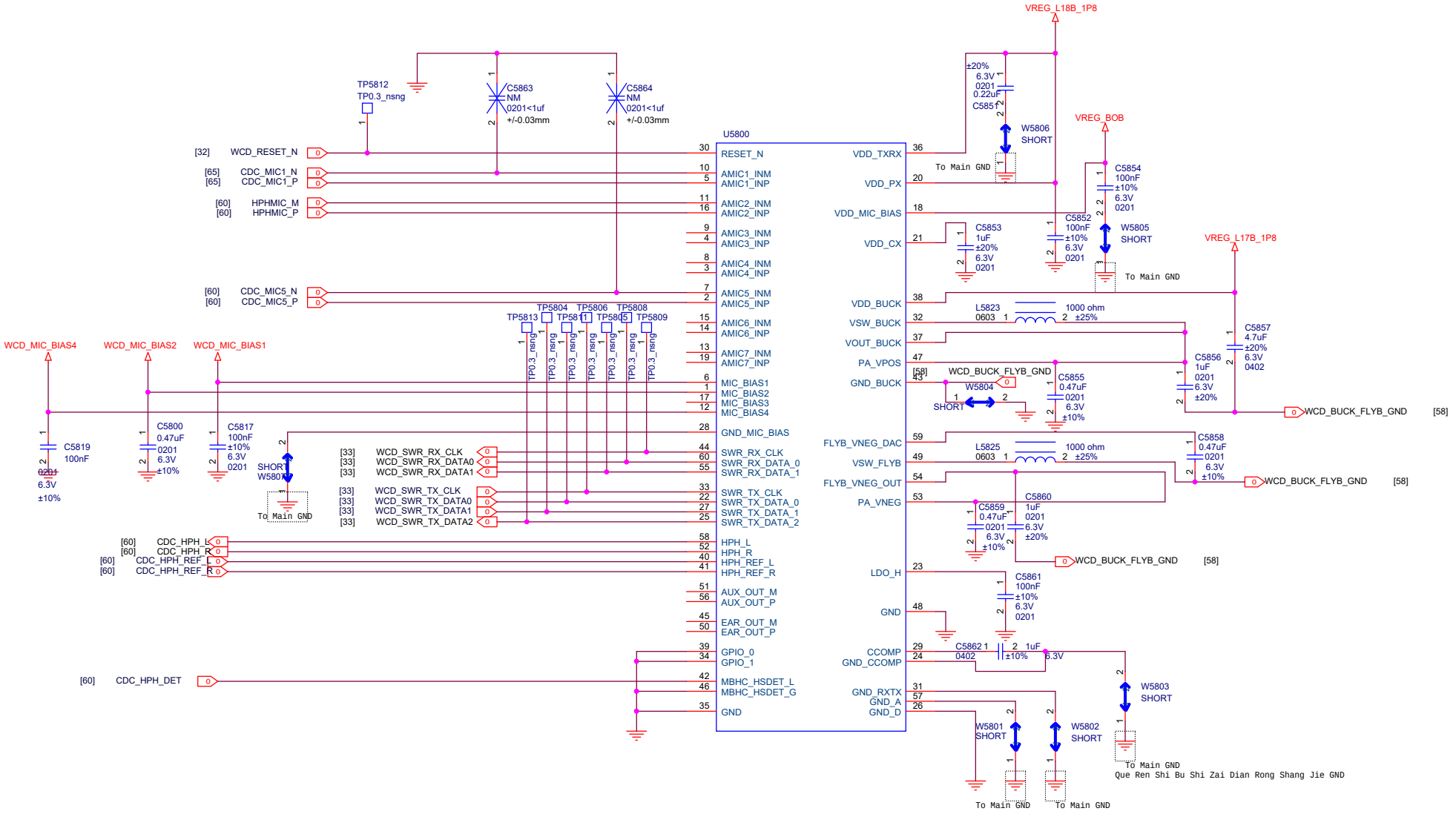

Title	M20_MAIN
Size A3	Document Number WCD9380-1
Rev	P0
Date:	Sheet 58 of 81

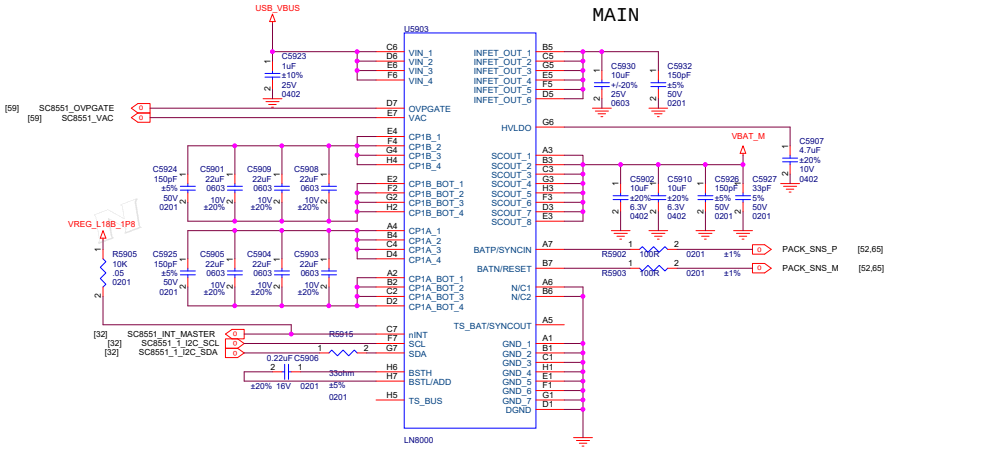

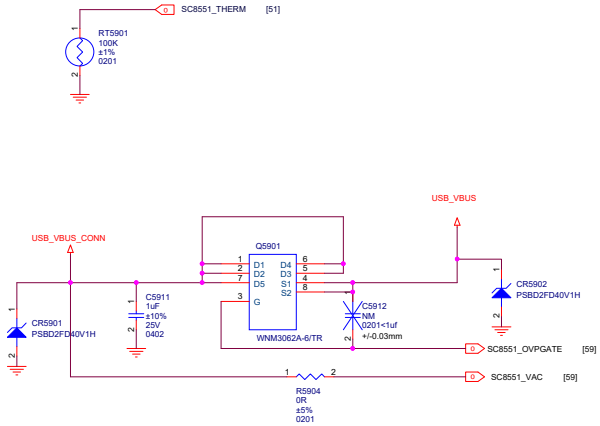

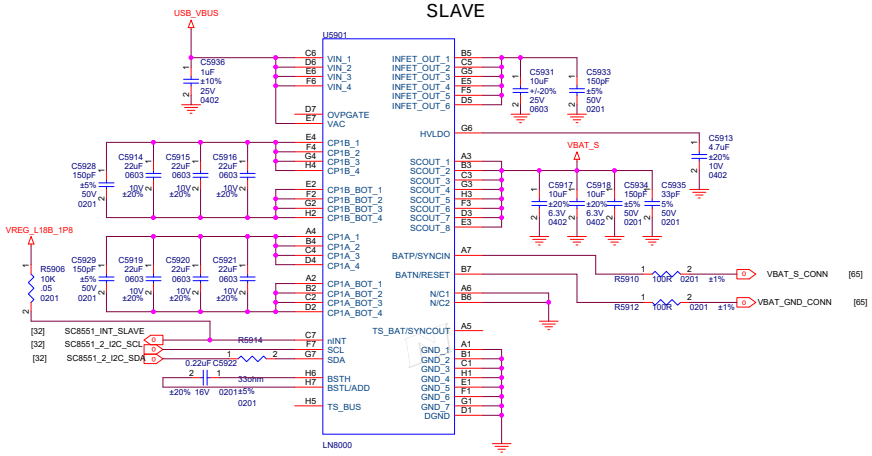

Title	L9/L9B_INT_MAIN		
Size A2	Document Number SMB1396		Rev P0
Date:		Sheet 59 of 74	

SPK

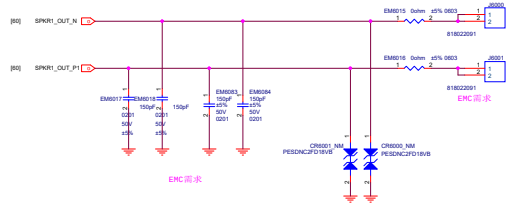

Second MIC

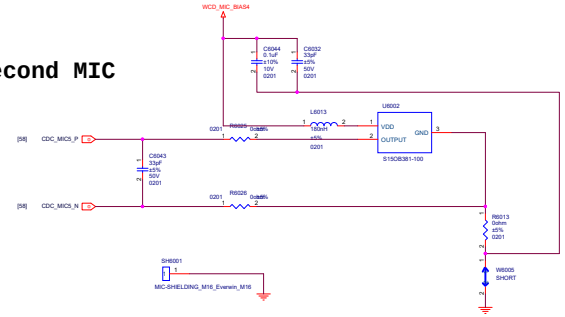

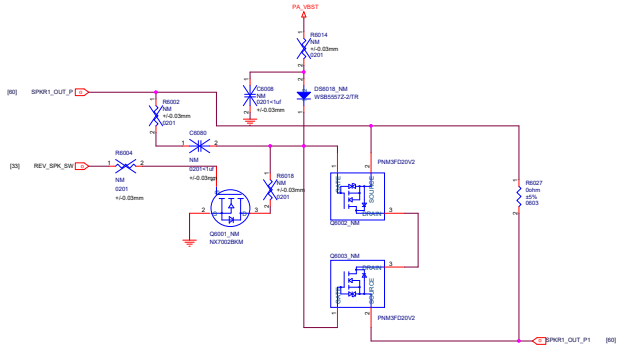

SPKR PA

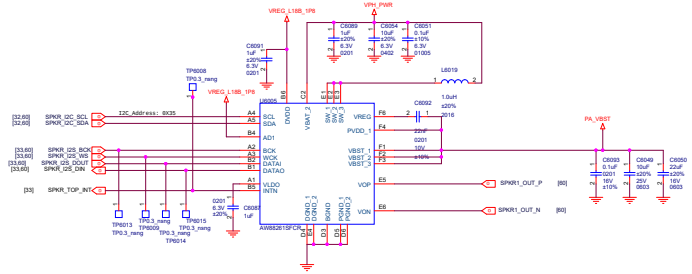

SPKR PA

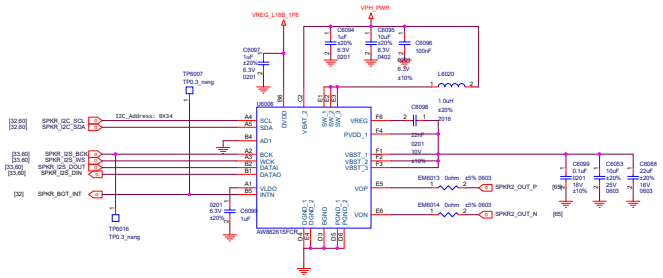

HEADSET

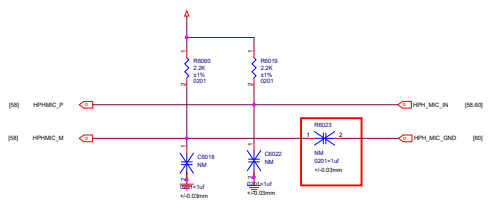

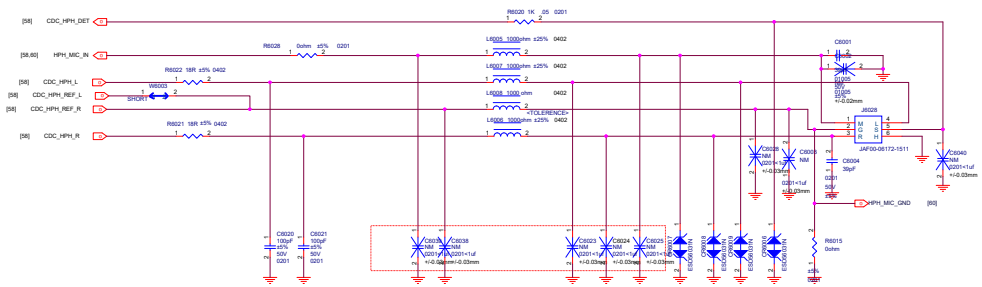

MI PHONE			
File: MT6873_SGA			
Size: A1	Document Number: AUDIO		Rev:
Date:	Sheet 60 of 74		

A+G

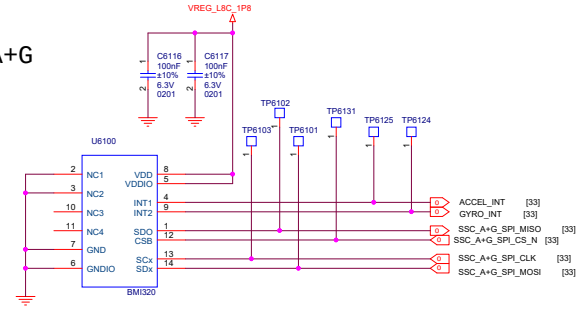

SAR LDO

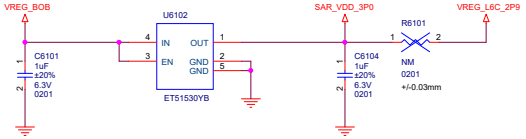

Title	M20_MAIN	
Size A2	Document Number SENSOR	Rev P0
Date:	Sheet 61 of 76	

COMPASS

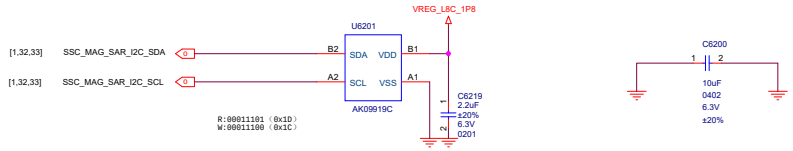

FLASH CON

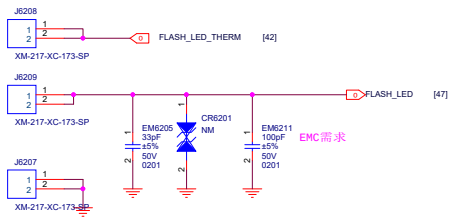

FP+PWRKEY

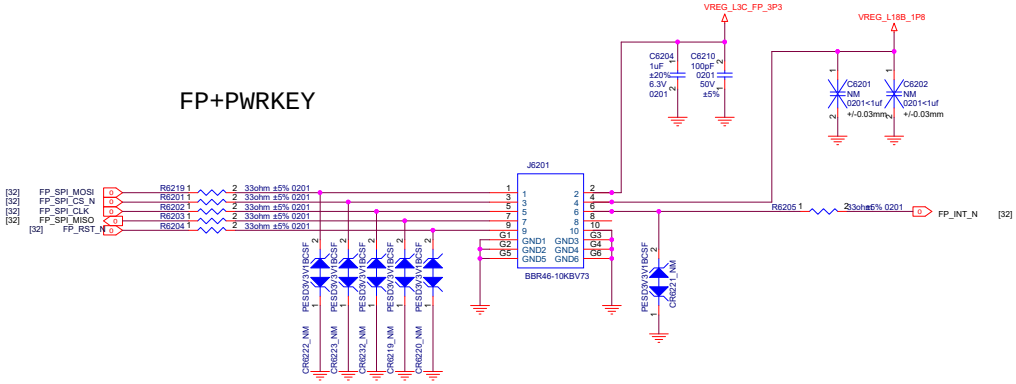

INFRARED

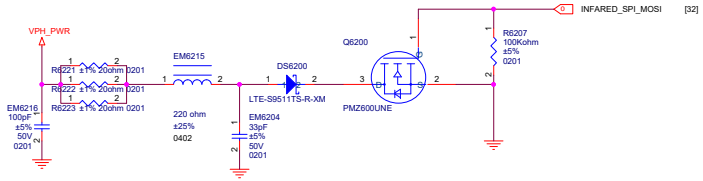

P_L-sensor

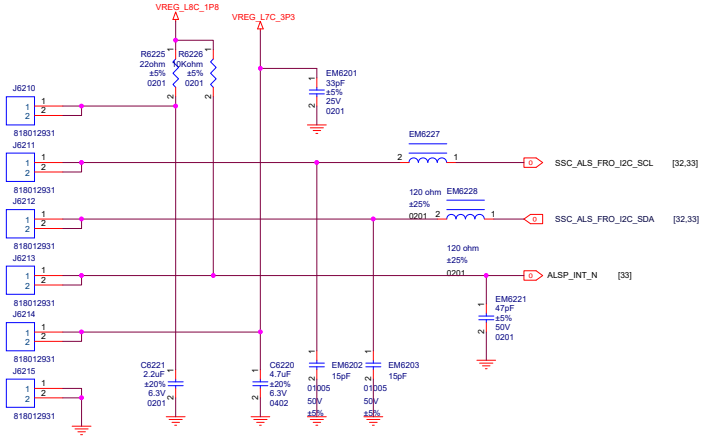

MI PHONE		
Title: M20_MAIN		
Size: A2	Document Number: SENSOR-2	Rev: P0
Date:	Sheet 62 of 76	

Sidekey

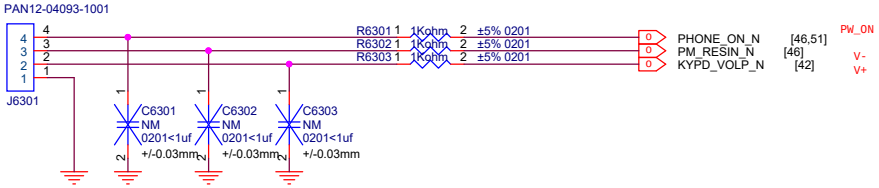

MI PHONE		
Title: MT6873_5GA		
Size: A3	Document Number: SIM CONNECTOR	Rev: P0
Date:	Sheet 63 of 74	

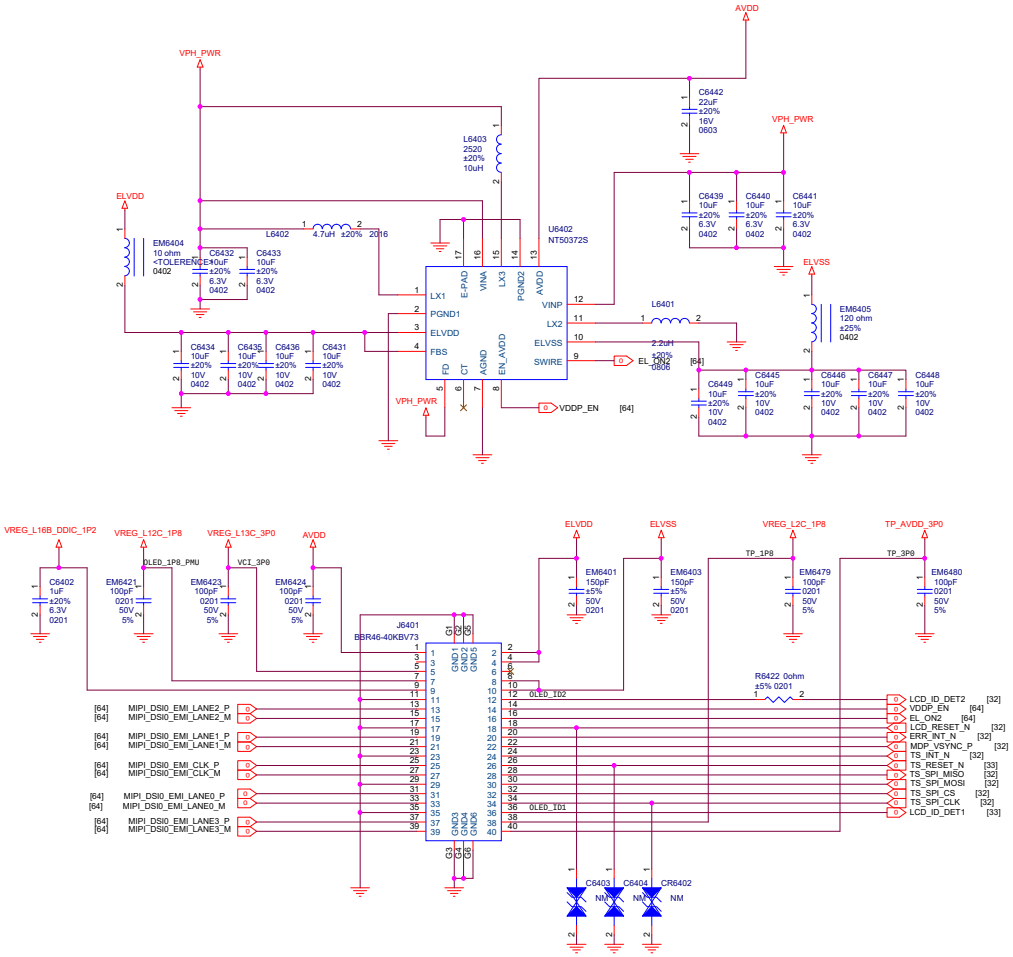

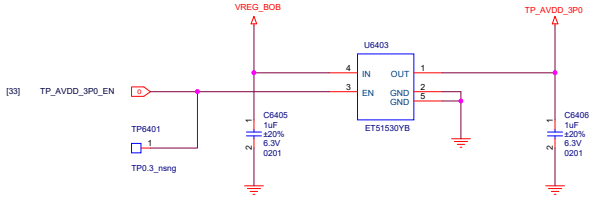

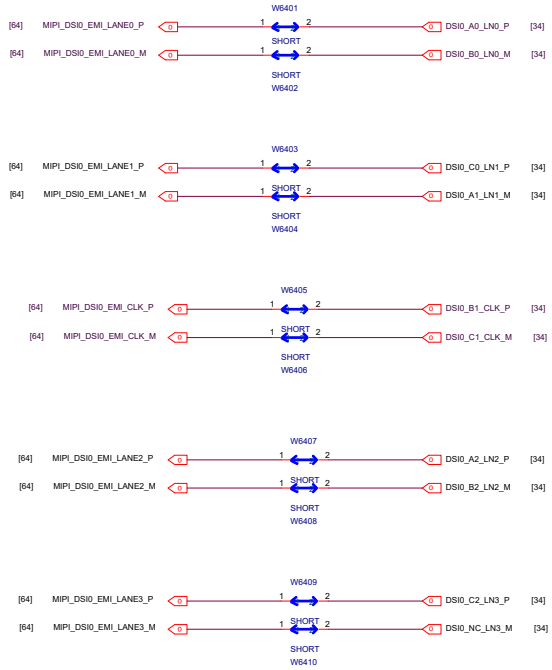

Title	TitleBlock0	
Size A2	Document Number M16_20_MAIN_0314-1500	Rev <RevCode>
Date:	Sheet 64 of 74	

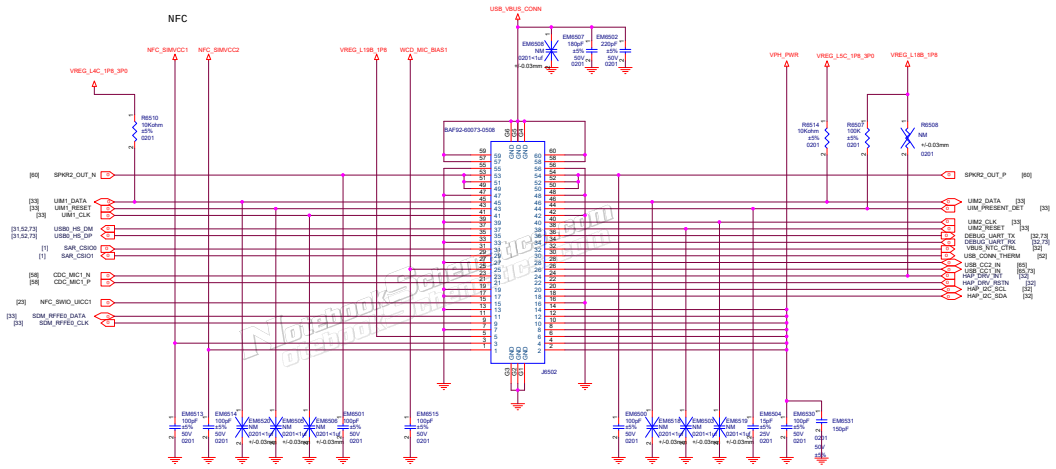

PRIMARY BAT CON

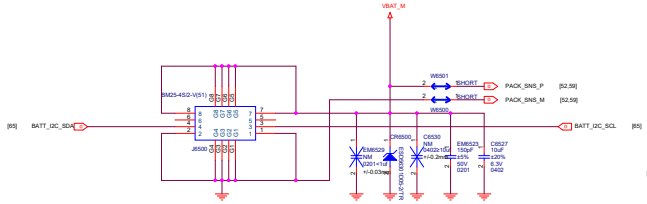

SECONDARY BAT CON

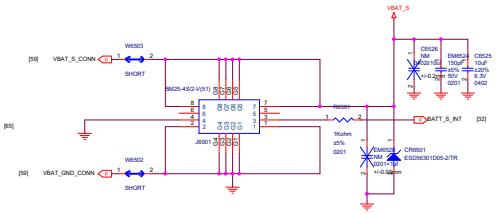

File:	TitleBlock0		
Size: A1	Document Number: MSM_20_MAIN_8314-1500		Rev: <RevCode>
Date: Thursday, September 08, 2022	Sheet 65 of 74		

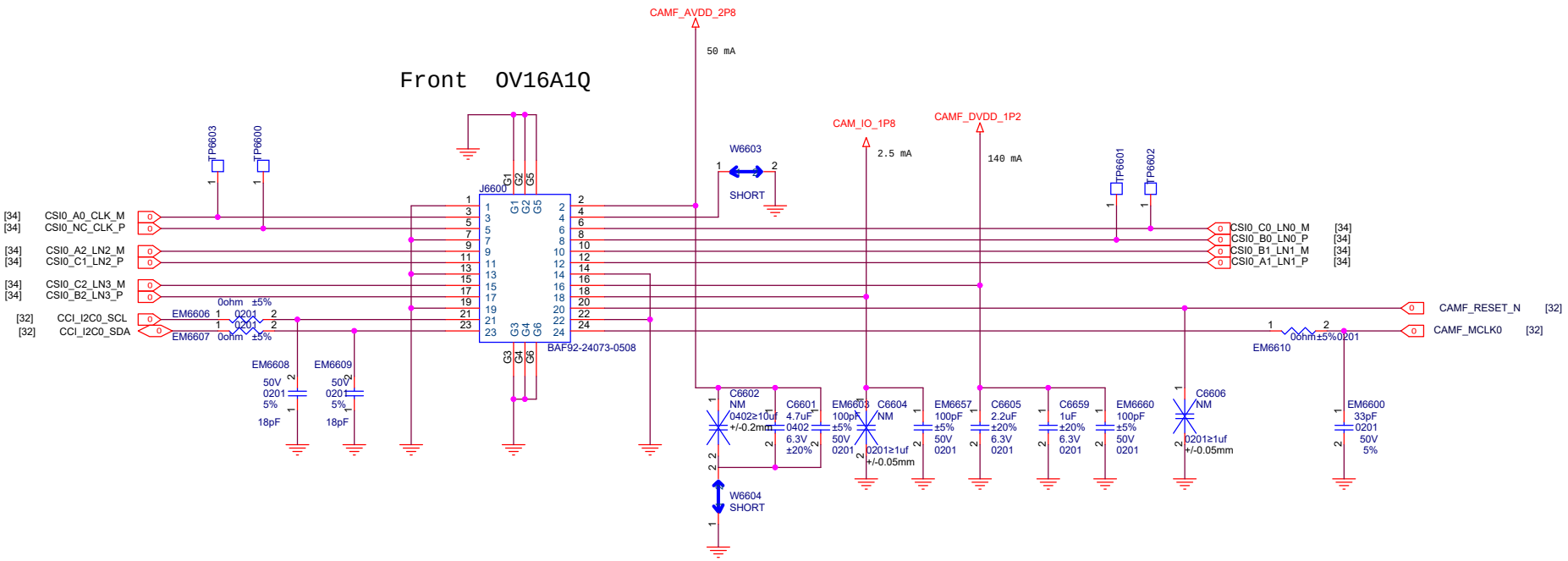

Title	K16_MAIN	
Size A3	Document Number Reserved(for Analog FM)	Rev P0
Date:	Sheet 66 of 71	

M20 WIDE 108M HM2SP & HM2SD

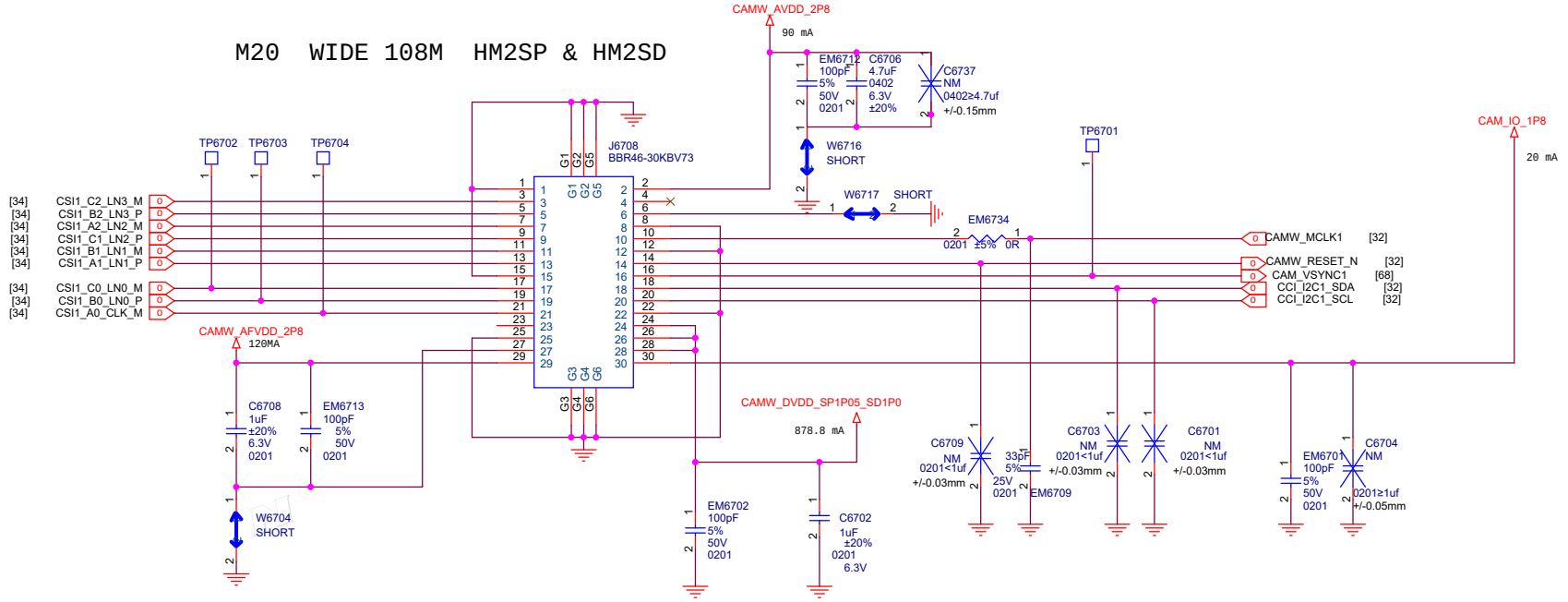

Title	K16_MAIN	
Size A3	Document Number WIDE&TELE CAMERA	Rev P0
Date:	Sheet 67 of 74	

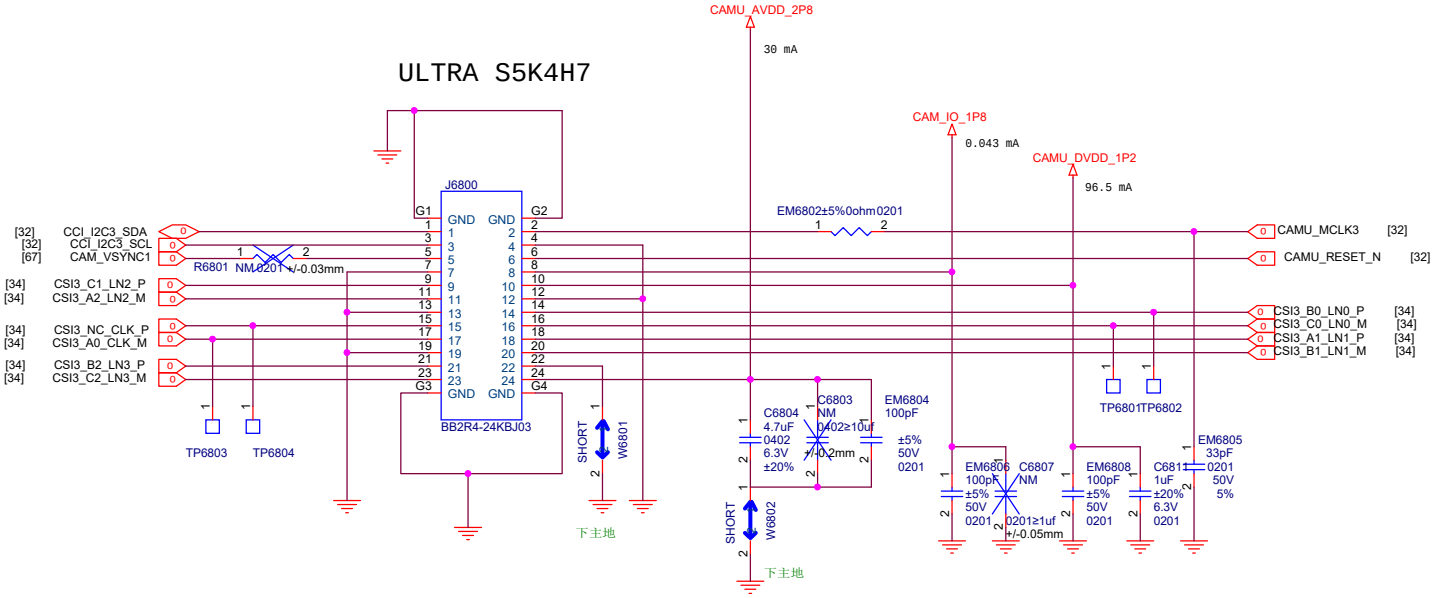

Title	K16_MAIN	
Size A3	Document Number ULTRA CAMERA	Rev P0
Date:	Sheet 68 of 71	

2M MACRO
first vendor: OV02B10

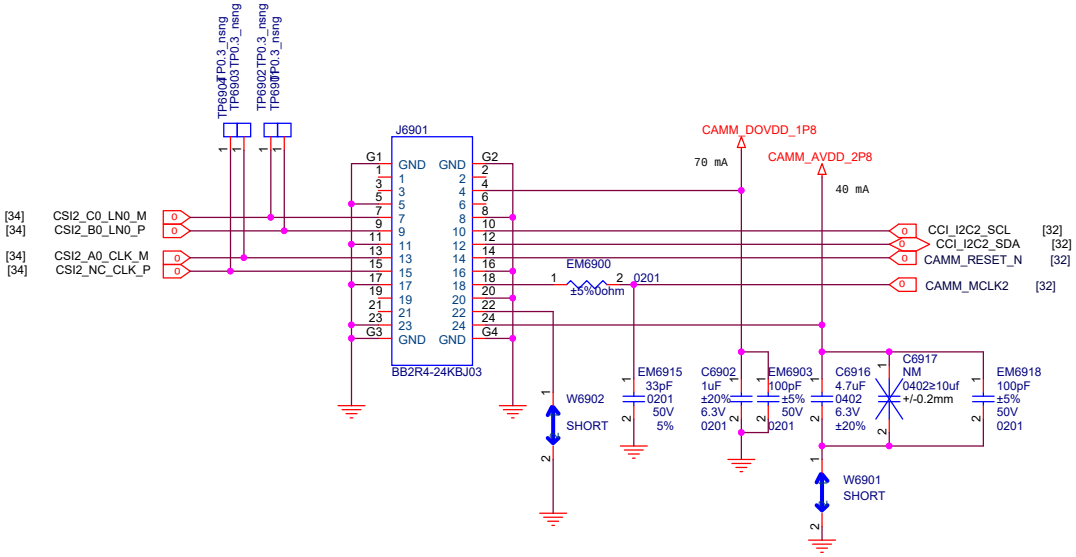

Title	K16_MAIN	
Size A3	Document Number ULTRA CAMERA	Rev P0
Date:	Sheet 69 of 76	

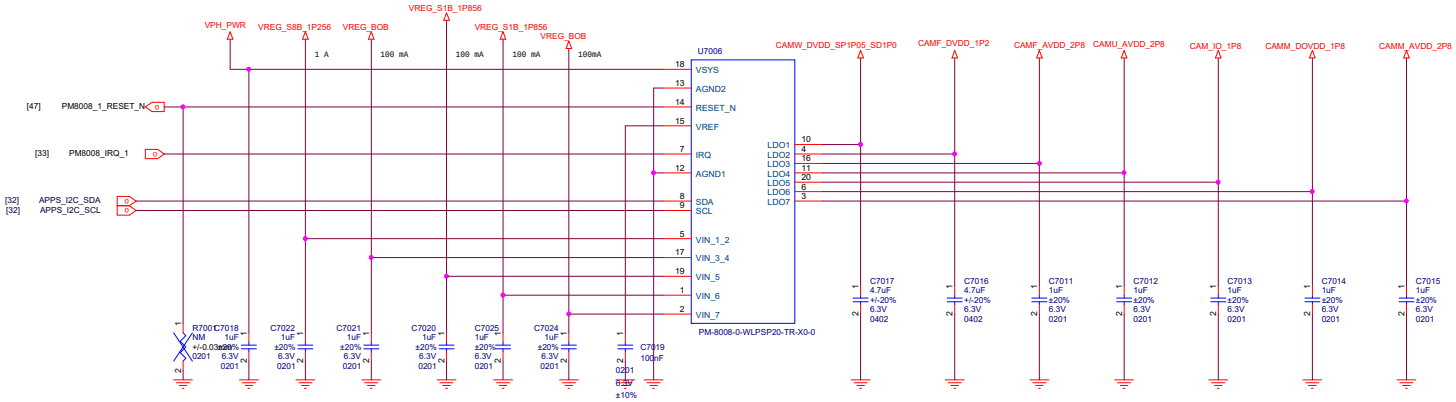

For Wide AFVDD 2P8

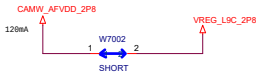

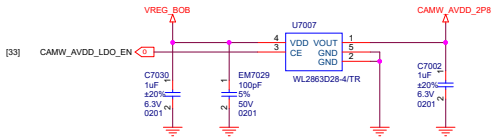

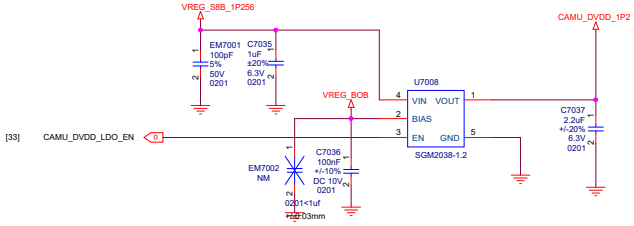

Title	L9/L9B_INT_MAIN	
Size A2	Document Number TEST POINT	Rev P0
Date:	Sheet 70 of 74	

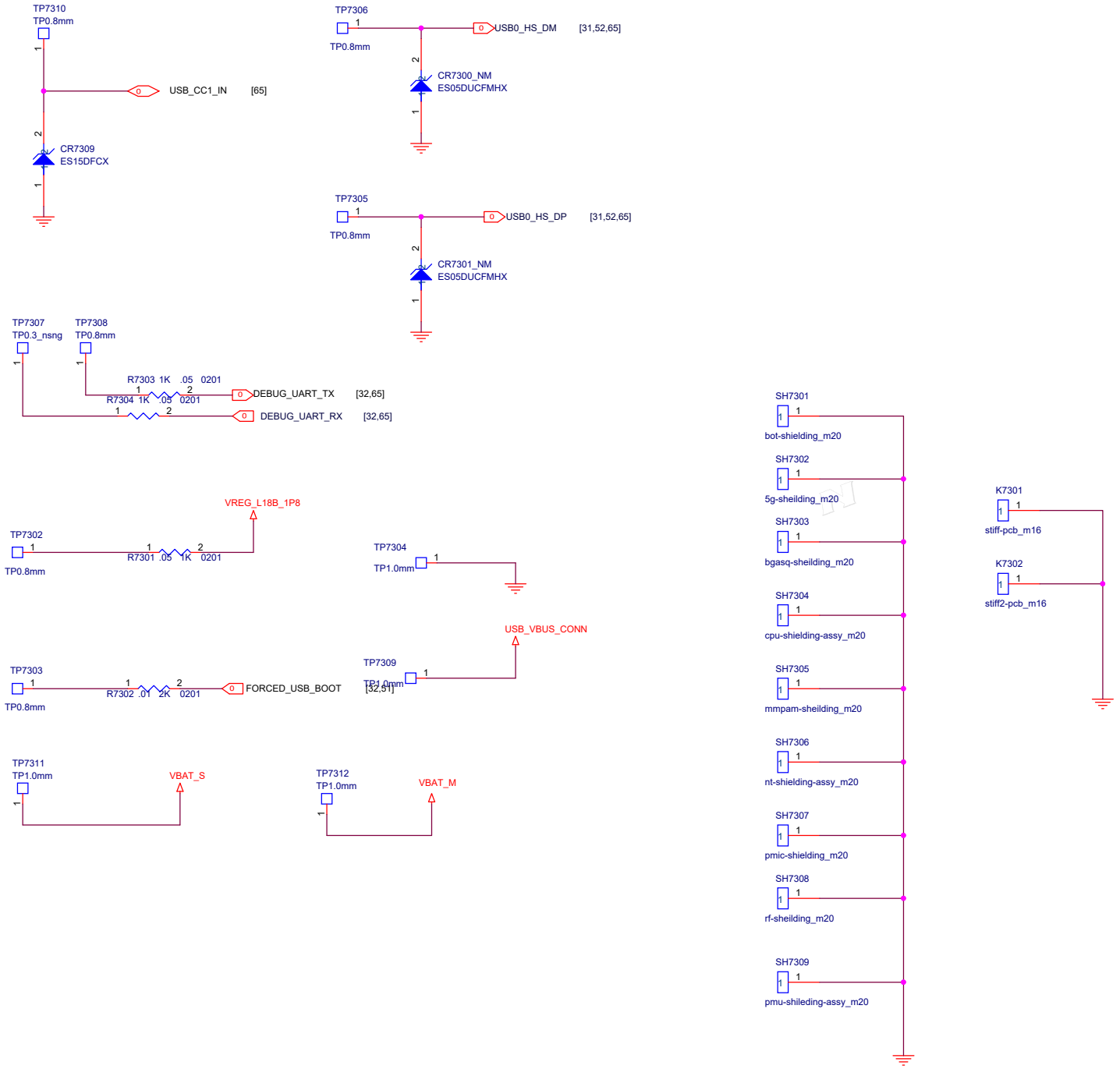

Title	L9/L9B_INT_MAIN	
Size A3	Document Number PM8009	Rev P0
Date:	Sheet 73 of 74	